This is a digital copy of a book that was preserved for generations on library shelves before it was carefully scanned by Google as part of a project to make the world's books discoverable online.

It has survived long enough for the copyright to expire and the book to enter the public domain. A public domain book is one that was never subject to copyright or whose legal copyright term has expired. Whether a book is in the public domain may vary country to country. Public domain books are our gateways to the past, representing a wealth of history, culture and knowledge that's often difficult to discover.

Marks, notations and other marginalia present in the original volume will appear in this file - a reminder of this book's long journey from the publisher to a library and finally to you.

Usage guidelines

Google is proud to partner with libraries to digitize public domain materials and make them widely accessible. Public domain books belong to the public and we are merely their custodians. Nevertheless, this work is expensive, so in order to keep providing this resource, we have taken steps to prevent abuse by commercial parties, including placing technical restrictions on automated querying.

We also ask that you:

+ *Make non-commercial use of the files* We designed Google Book Search for use by individuals, and we request that you use these files for personal, non-commercial purposes.
+ *Refrain from automated querying* Do not send automated queries of any sort to Google's system: If you are conducting research on machine translation, optical character recognition or other areas where access to a large amount of text is helpful, please contact us. We encourage the use of public domain materials for these purposes and may be able to help.
+ *Maintain attribution* The Google "watermark" you see on each file is essential for informing people about this project and helping them find additional materials through Google Book Search. Please do not remove it.
+ *Keep it legal* Whatever your use, remember that you are responsible for ensuring that what you are doing is legal. Do not assume that just because we believe a book is in the public domain for users in the United States, that the work is also in the public domain for users in other countries. Whether a book is still in copyright varies from country to country, and we can't offer guidance on whether any specific use of any specific book is allowed. Please do not assume that a book's appearance in Google Book Search means it can be used in any manner anywhere in the world. Copyright infringement liability can be quite severe.

About Google Book Search

Google's mission is to organize the world's information and to make it universally accessible and useful. Google Book Search helps readers discover the world's books while helping authors and publishers reach new audiences. You can search through the full text of this book on the web at `http://books.google.com/`

Digitized by Google

Library
of the
University of Wisconsin

Digitized by Google

Digitized by Google

Digitized by Google

VALVES AND VALVE GEAR MECHANISMS

BY

W. E. DALBY, M.A., B.Sc.,
M.Inst.C.E., M.I.M.E., A.M.I.N.A.,
UNIVERSITY PROFESSOR OF CIVIL AND MECHANICAL ENGINEERING, CITY AND GUILDS OF LONDON INSTITUTE CENTRAL TECHNICAL COLLEGE.

WITH ILLUSTRATIONS

LONDON
EDWARD ARNOLD
41 & 43, MADDOX STREET, BOND STREET, W.
1906

[*All Rights reserved*]

Digitized by Google

Digitized by Google

97903
JUL 9 1906
THH
.D15

6951606

PREFACE.

VALVE gear mechanisms have fascinated successive generations of engineers, and, if the truth were known, there are few mechanical engineers who have not at some time or other tried to invent a new gear. In consequence, the number of valve gears described in the Patent Office Specifications, and indeed the number of different types which have been actually made, is exceedingly great. My object is not to enumerate these, nor even to enumerate all the types which are in actual work at the present time, but rather to select a few typical gears, well tried, and to some extent representing the survival of the fittest types, and to examine them thoroughly and by methods which may generally be applied to all kinds of gear similar to those chosen.

The scope of this volume is limited to an examination of types of those gears in which there is one, and only one, position of the valve for a given position of the crank. In other words, the position of the valve is a function of a single variable only, namely the crank angle. A few gears are however described incidentally in which a governor is included in the mechanism operating the valve. In this case there is more than one position of the valve for a given position of the crank. The valve position is, in fact, a function of two variables, namely the crank angle and the time, and the valve position cannot be set out on a drawing from kinematic considerations alone. The proper examination of gears of this kind requires a study of the dynamics of governors, and this is not included in the present volume.

The matter is arranged so that those who prefer the graphical to the analytical method may obtain all the useful technical information regarding the gears examined without reading the analytical articles, and so that students of technical colleges may begin the study of the subject in their first year, continuing with the later portions of the book in their second and third years. With this purpose in view the first five chapters include the descriptive matter relating to valves and the discussion of the distribution of steam effected by the simple eccentric gear, the problems in connection therewith being treated by drawing-

Digitized by Google

board methods alone. Chapter VI covers the same ground as Chapters III, IV and V, but the trigonometrical method is substituted for the geometrical method used up to that point. Chapter VI is, in fact, an analytical summary of the previous chapters, and a study of it will show that there are plenty of useful trigonometrical exercises of an interesting kind to be obtained from valve gear mechanisms.

Chapters VII and VIII are devoted mainly to the subject of reversing gears, and in these the preceding sequence of method is applied to each valve gear mechanism illustrated. That is to say, the properties of the gear are first investigated by drawing-board methods alone, and then the gear is subjected to an analytical examination from which rules are formulated by means of which the distribution of steam the gear can effect may be found approximately without the labour of drawing the actual displacement curves. In the analytical portions of these two chapters my indebtedness to Zeuner's classical work on *Valve Gears*, and to Rankine's work *Machinery and Millwork* will be apparent.

Chapter IX is devoted principally to the exemplification of certain dynamical problems which arise in connection with high speed valve gears. The method used in the investigation of the acceleration of the parts of the gear is that communicated to the Royal Society of Edinburgh in 1885 by Professor R. H. Smith, and further illustrated in *Graphics* by the same author. The gear selected for detailed examination is the standard Joy gear of the Lancashire and Yorkshire Railway Company. Each link of a particular gear was made the subject of experiment at the Horwich Locomotive Works in order that its dynamical peculiarities might be ascertained, and the results of these oscillation experiments are stated in Table 12, p. 303. Without the co-operation of Mr Aspinall it would have been impossible to present such a complete practical example. There are various other examples in the Chapter relating to dynamical problems in connection with the design of connecting and eccentric rods. This Chapter may be considered from two aspects—first, from the purely technical aspect in connection with the design of high speed valve gears; secondly, from the educational aspect, because all the principal theorems regarding the motion of a rigid body in a plane are involved in the working out of the technical problem discussed, and since these principles have a general application to mechanisms a student of the Dynamics of Machines may study this Chapter with advantage without necessarily acquiring a detailed knowledge of the previous chapters.

Although the representation of the valve displacement by a Fourier series may not have an immediate application in the design of a valve gear, yet the method is exemplified in the last Chapter because of the

Digitized by Google

increasing use which is being made by engineers of this powerful and searching method of analysis. Comparatively recently there was published in the *Bulletin de la Société Internationale des Electriciens* (Nov. 1901, Tome 1, 2de série) the Fourier series corresponding to the crank effort curves of 28 engines, each series being carried to 9 terms. The method is of enormous value in dealing with electrical problems. A brief discussion of the principles on which the Fourier method is based is associated with the examples to which the method is applied for the benefit of those who may not have the time to study the mathematical works devoted to the subject.

The valve diagram used throughout the book is the rectangular form, generally known as the Osborne Reynolds diagram. This diagram has many advantages, one of them being that a displacement curve is the graph of the equation representing it in rectangular coordinates, so that the change from analysis to the diagram or *vice versa* may easily be made at any time.

It is important to notice that all the valve diagrams in the book are drawn to represent the motion of the valve as it would appear to an observer looking at the engine from a position where the cylinder is seen to the left of the crank shaft. And further that what is called the zero crank position is that position of the crank in the line of stroke where the crank is seen to the right of the crank shaft. The positive direction of rotation from the position of the observer appears to be counter-clockwise.

If any valve diagram be given a quarter turn in the clockwise direction, the displacement curves will represent the movement of the valve in a marine engine.

I am indebted to Mr J. A. F. Aspinall of the Lancashire and Yorkshire Railway for the drawings of the Joy gear and for other data; to M. Bosquet for the drawings of the Walschaert gear of the Northern of France engines; to Mr Churchward for the drawings of the steam controlling gear used on the Great Western Railway; to Mr Holden for the drawings of the Great Eastern Railway link motion, and of the combined hand and power controlling gear; to Mr Malcolm for the drawings of the Walschaert gear used on the Belfast and County Down Railway; to Mr Sulzer for drawings of the Sulzer gear; to Mr F. W. Webb for the drawings of the Allan gear used on the London and North Western Railway; to Mr Humphry for the drawings of the marine type of link motion and slide valve; to Mr Yarrow for the drawings of the all-round type of controlling gear, and to many other English and American friends and firms for drawings and information, acknowledgements of which are made in the text.

Digitized by Google

Nearly all the valves illustrated and described can be seen as sectional models, and the valve gears as working models, in the unique collection of engineering apparatus which forms the Machinery Section of the Victoria and Albert Museum, South Kensington. This collection is the finest of its kind in the world. The models, which can be set in motion, are supplied with compressed air and can be started at will by the visitor. The models are usually small scale reproductions of actual engines and machinery, and consequently show the details of construction used in practice. It is impossible to place too high an estimate on the educational value of this fascinating and magnificent collection.

I am specially indebted to Mr Wood-Smith, and to Mr Goodwin, formerly students at the City and Guilds Technical College, Finsbury, for help in the reduction of the working drawings to suitable illustrations and in the drawing of the valve diagrams.

My grateful acknowledgements are also due to Mr C. G. Lamb for carefully and critically reading the proofs.

There are a considerable number of fully worked examples distributed through the book, and I shall be grateful for notice of errors which remain uncorrected.

W. E. D.

CENTRAL TECHNICAL COLLEGE,
December 1905.

Digitized by Google

CONTENTS.

CHAPTER I.

THE CYCLE OF OPERATIONS.

ART.		PAGE
1.	Definition of a valve gear	1
2.	Dead points of piston. Stroke	1
3.	The cycle of events in a steam engine cylinder	1
4.	Nett work done by the steam during the cycle	4
5.	Single- and double-acting engines	5
6.	Instroke and outstroke cycles	5
7.	Specification of a cycle	6

CHAPTER II.

ON STEAM DISTRIBUTING VALVES.

8.	General remarks	7
9.	Lift valves. The mitre valve	8
10.	Double beat or equilibrium valve	9
11.	Four-seated equilibrium valve	11
12.	Dashpot and spring	11
13.	Effect of heat on double beat valves	13
14.	The slide valve. General description	14
15.	Steam and exhaust laps	16
16.	Negative lap	17
17.	Critical positions of a slide valve	17
18.	Inside steam admission	18
19.	Marking the valve spindle	18
20.	Modifications of the typical form of slide valve	19
21.	The Trick valve	20
22.	The double ported valve	21
23.	Balancing piston	22
24.	Balanced valves	22
25.	The piston valve	27
26.	The Vauclain piston valve	29
27.	The Smith segmental valve	30
28.	The rocking valve	32
29.	The inertia of a valve	35

Digitized by Google

CHAPTER III.

THE CRANK AND CONNECTING ROD.

ART. PAGE
30. General description 37
31. Determination of the piston position corresponding to a given crank angle 37
32. Piston displacement curve on crank angle base 39
33. Example. 39
34. Alternative construction 40
35. Use of a template to find q 40
36. On the effect of changing the proportion between the length of the connecting rod and the crank radius 41
37. Piston displacement curve on big end base 42
38. The polar diagram 42

CHAPTER IV.

THE SIMPLE ECCENTRIC GEAR.

39. Description of gear 44
40. Eccentric gear equivalent to a crank and connecting rod . . . 45
41. Displacement diagram of the valve centre 45
42. Angular difference between the main crank and the eccentric . . 46
43. Angular advance. Angular lag 48
44. To find the simultaneous displacements of the piston and the valve corresponding to a given crank angle and a given angular advance 49
45. The valve diagram 51
46. Adjustment of scales 52
Examination of the distribution of steam effected by the simple eccentric gear 53
47. Measurement of data 53
48. The drawing of the valve diagram 56
49. The velocity of the valve 59
50. On the variation of the elements of the gear and the effect on the distribution of steam 61
51. The oval diagram 63
52. The Zeuner diagram 64
53. The Reuleaux diagram 67
54. The Bilgram diagram 68
Design of the gear to fulfil given conditions 70
55. Determination of a displacement curve to pass through two given points. 70
56. Determination of a displacement curve to pass through one given point 72
57. Quantities determining points on the displacement curve . . 73
58. Design problems 73
59. Adjustment of the inequalities of distribution by means of unequal laps on the slide valve 77

Digitized by Google

ART. PAGE

60. Adjustment of the inequalities of distribution by means of a rocking lever 78
61. The effect of the rocking lever on the angular advance of the eccentric sheave. Inclination of the centre line of the valve gear and the centre of line of the main gear to one another 81
62. The design of the steam ports and passages 84
63. On valve setting 86

CHAPTER V.

INDEPENDENT CUT OFF GEARS.

64. The separate cut off valve 88
65. The Meyer gear. Constant travel, variable lap. Example . . 90
66. The Rider cut off valve. Constant travel, variable lap . . . 102
67. The cut off plate. Constant lap, variable travel 104
68. The Corliss gear 106
69. The Sulzer gear 110

CHAPTER VI.

THE ANALYTICAL METHOD.

70. The analytical method 114
71. Crank and connecting rod 114
72. The valve displacement 116
73. The valve velocity 121
74. Example, simple eccentric gear 121
75. The design problem 124
76. The Meyer gear 126
77. Example of the Meyer gear 128
78. Cut off plates 131

CHAPTER VII.

REVERSING GEARS. LINK MOTIONS.

79. Preliminary 132
80. Hand reversing 132
81. The loose eccentric sheave 134
82. Reversing gears with two eccentric sheaves 136
83. The link motion. Great Eastern Railway. Central Railroad of New Jersey. Battleship engine built by Messrs Humphry and Tennant . 138
84. The general angular positions of the eccentric sheaves . . . 145
85. Examination of the distribution of steam effected by a link motion 146
86. Definition of u 146
87. Valve displacement curves of the Great Eastern Railway link motion 148
88. Percentage and port opening diagrams 153
89. Link motion with crossed rods. Valve displacement curves . . 157

Digitized by Google

ART. PAGE

90. Valve displacement curves of the Great Eastern Railway link motion arranged for inside steam admission 158
91. The drawing of the valve displacement curves of a Stephenson link motion 162
92. The suppression of the eccentric rods 165
93. Slip and slip curves. Variation of u 166
94. Apparatus for drawing valve displacement curves mechanically . 168
95. Approximate valve displacement curves. Equivalent eccentric. Macfarlane Grey's rule 170
96. General theory of the link motion. Simplified form of gear and its equivalent eccentric 172
97. Theory of the Stephenson link motion. Equivalent eccentric . 175
98. The design of a link motion 183
99. The design of a link motion, continued. The weigh-bar shaft . 185
100. The Gooch link motion 188
101. The Allan straight link motion, London and North Western Railway 191
102. The Allan motion, continued. On the proportion between the arms of the weigh-bar shaft 193
103. The Allan motion, continued. Valve displacement curves of the London and North Western Railway straight link motion . . 196
104. The Allan motion, continued. Approximate theory. Equivalent eccentric 202
105. The design of the Allan gear 206
106. The velocity of the valve of a link motion 207
107. Controlling mechanisms for reversing gears 208
108. Power reversing mechanism. Great Western Railway . . . 211
109. Holden's combined hand and power reversing mechanism. Great Eastern Railway 213
110. The "all round" steam reversing apparatus 215
111. Brown's power reversing mechanism 219

CHAPTER VIII.

WALSCHAERT GEAR. RADIAL GEARS.

112. Resolution of the valve displacement curve into two components . 221
113. The reversing gear known either as the Heusinger von Waldegg or the Walschaert gear 224
114. Walschaert gear. Northern of France Railway. Belfast and Northern Counties Railways 227
115. Walschaert gear. Valve displacement curves of the Northern Railway of France gear 230
116. Walschaert gear. Approximate theory 233
117. The design of a Walschaert gear 239
118. Example 241
119. Hackworth gear 243
120. Two geometrical conditions which must be satisfied by a radial gear . 246

Digitized by Google

ART. PAGE
121. Marshall gear 247
122. Impracticability of taking motion directly from the connecting rod 248
123. Brown gear 249
124. Joy gear, Lancashire and Yorkshire Railway 250
125. Joy gear, continued. Valve displacement curves of the Lancashire and Yorkshire gear 253
126. Joy gear, continued. The drawing of the valve displacement curves 254
127. Kinematic Theorems useful in the setting out of valve gears with applications to the Joy gear 254
128. Joy gear. Approximate theory 263
129. Design of the Joy gear 265
130. Reversing by interchange of the steam and exhaust pipes . . 267
131. Steam steering gear 268
132. Crank angles from which an engine cannot be started . . . 271

CHAPTER IX.

STATICAL AND DYNAMICAL PROBLEMS IN CONNECTION WITH THE DESIGN OF A VALVE GEAR.

133. The general problem 279
134. Given the crank angle and the force acting along the valve spindle, to find the force acting at the joint R of a Joy gear when the inertia loading is neglected 281
135. Given the speed of the crank shaft and the instantaneous value of the crank angle, to find the force at the joint R, due to inertia loading 284
136. To draw a velocity diagram for a given mechanism . . . 284
137. Example. Crank and connecting rod 286
138. To draw an acceleration diagram for a given mechanism . . 286
139. To draw the acceleration diagram for a four-bar chain for a given configuration 288
140. To draw the acceleration diagram of the Joy gear shown in Fig. 140, the configuration being defined by a given crank angle and the crank being assumed to rotate with uniform angular velocity. The path PP is in the position for full forward gear 290
141. To find the angular acceleration of a link from the acceleration diagram 295
142. Dynamical principles from which the accelerating forces acting on the links of a gear may be found when the accelerations are known 296
143. To find the moment of inertia of a link of a mechanism about an axis, through its mass centre, perpendicular to the plane in which the link moves 297
144. Find the accelerating forces in magnitude and position for the Lancashire and Yorkshire gear, Fig. 140, when the crank pin has a velocity of 30 feet per second, and the crank angle has the value θ. 299
145. Bennett's construction for finding a point in the line of action of the force producing the instantaneous acceleration of a link when the directions of the accelerations of two points of the link are respectively given 304

Digitized by Google

ART. PAGE

146. Find the force which must act at R to balance the accelerating forces found in Art. 144 308
147. To find the maximum bending moment on the connecting rod, Fig. 140 309
148. Link motion. Velocity diagram 316
149. Link motion. Inertia forces 318
150. Link motion. Inertia stresses in the eccentric rod 320
151. Stresses in an eccentric rod, coupling rod, or connecting rod due to the inertia loading and an end thrust combined 323

CHAPTER X.

REPRESENTATION OF A VALVE DISPLACEMENT CURVE BY A TRIGONOMETRIC SERIES.

152. Preliminary remarks 328
153. The value of B may be found so that the curve, $s = B \sin \theta$, will pass through a given point P 329
154. Values of B_1 and B_2 may be found so that the curve
$$s = B_1 \sin \theta + B_2 \sin 2\theta$$
will pass through two given points $s_1, \theta_1, s_2, \theta_2$ 330
155. Values of $B_1, B_2 \ldots B_n$ may be found so that the curve
$$s = B_1 \sin \theta + B_2 \sin 2\theta + \ldots + B_n \sin n\theta$$
will pass through n given points between 0 and π, there being one point and one point only corresponding to each value of θ . 331
156. To find the value of the coefficients in the series
$$s = B_1 \sin \theta + B_2 \sin 2\theta + \ldots + B_n \sin n\theta$$
when n is increased indefinitely 333
157. Cosine series 335
158. Sine and cosine series 335
159. Analysis of a curve, given on a base 2π long, into two component curves, one capable of representation by a sine series, the other by a cosine series 337
160. Adjustment of the expressions for the coefficients to the limits 0 and 2π 338
161. Geometrical method of computing the limiting values of the coefficients $B_1, B_2 \ldots B_n, A_0, A_1 \ldots A_n$ 340
162. Formulae for calculating the approximate values of the coefficients up to the third multiple angle 342
163. Examples of the representation of valve displacement curves by a series, neglecting all terms after the third multiple angle . . 343
164. Formulae for calculating the approximate values of the coefficients up to the second multiple angle. Examples. Equivalent eccentric 345
165. Modification of Reuleaux valve diagram to find the displacement x, when the second harmonics of the connecting rod gear and the valve gear are included 349

APPENDIX 354

INDEX 359

Digitized by Google

CHAPTER I.

THE CYCLE OF OPERATIONS.

1. **Definition of a valve gear.** The commonest way of utilizing a fluid pressure for the performance of work is to arrange for it to act on a piston enclosed in a cylinder, the to and fro motion of the piston being maintained by the properly timed entry and exit of the fluid.

The **valves** which are used to regulate this entry and exit are of many forms and are arranged in many ways, but whatever the form and however they are arranged the duty is the same, namely to admit, cut off, and release the fluid from the cylinder at the proper instants.

A **valve gear** may be defined as a mechanism, operated by the engine itself, whereby the valves regulating the entry and exit of fluid to and from the cylinder are opened and closed.

The valve gears considered in this volume are those used in connection with steam engines.

2. **Dead points of piston. Stroke.** Since all points in a piston move at the same speed in parallel lines, the motion of the piston as a whole may be defined by the motion of any one of its points. The context will always indicate which point is chosen.

The points at the ends of the cylinder where the piston changes its direction of motion are commonly called **dead points.** At these points the piston is momentarily at rest. The **stroke** of a piston is the distance between its dead points.

3. **The cycle of events in the steam distribution.** An **event** of a stroke is the opening or closing of a valve controlling the entry or exit of steam.

Digitized by Google

Let the full lines, Fig. 1, represent a diagrammatic view of a steam engine cylinder and piston equipped with valves *S* and

Fig. 1.

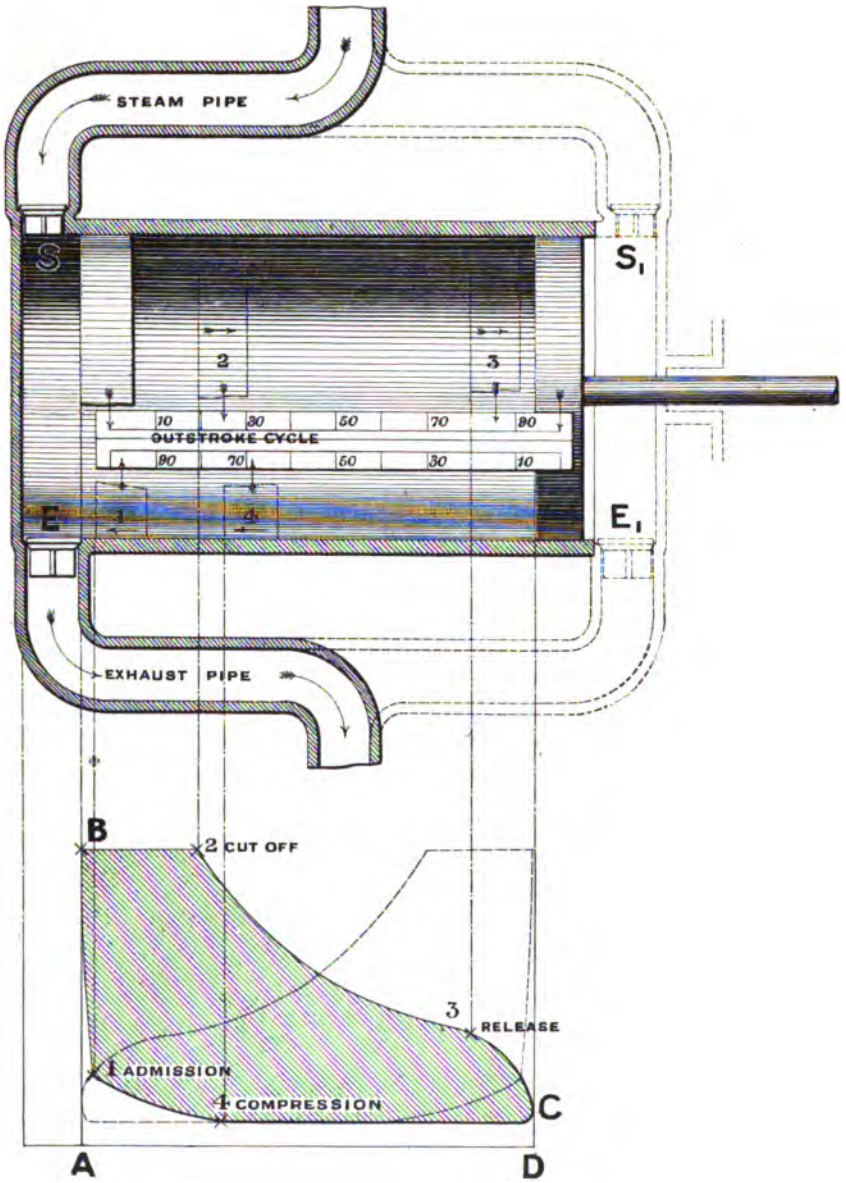

Fig. 2. Cycle of Events in a Steam Engine Cylinder.

E, *S* controlling the admission of steam and *E* the exit, to and from the chamber formed by the cylinder and the left-hand face of

Digitized by Google

the piston. No method is indicated of working these valves, but it is to be understood that they can be opened and closed from outside at the right instants by appropriate mechanism. Fig. 2, below Fig. 1, is a diagram in which pressure is plotted vertically against the volume horizontally, the volume scale being such that the distance between the dead points of the cylinder represents the volume displaced by the piston during a stroke.

1st event. Admission. Suppose the piston to be moving towards the left dead centre. The steam valve *S* is opened for the admission of steam at the piston position marked 1, just before the piston reaches the left dead centre, the incoming steam thus meeting and opposing the motion of the piston from the point 1 until it arrives at its dead point. By the time the piston arrives at its dead point the whole space between it and the steam valve should be filled with steam at the steam pipe pressure, its state as regards volume and pressure being indicated by the cross at *B*, Fig. 2.

2nd event. Cut off. The piston, urged by the steam pressure, now moves towards the right-hand dead point, the valve *S* still being held open. The steam pipe should be made large enough to allow sufficient steam to enter the cylinder to maintain the pressure fairly constant as the volume is increased by the motion of the piston. At a certain point 2 the valve *S* is closed and the supply of steam cut off. The state of the steam as regards pressure and volume at this point is shown by point 2 in the pressure-volume diagram, assuming the steam pipe to be large enough to admit sufficient steam to maintain the pressure constant as the volume is increased by the motion of the piston. From this point onwards the steam increases in volume as the piston moves towards its right-hand dead point and the pressure falls, though the weight of the steam in the cylinder remains constant providing

1. That none leaks away through the exhaust valve *E*;
2. That none leaks by the piston;
3. That no fresh steam leaks in through the valve *S*.

The pressure falls according to laws complicated by the fact that although no steam may leak away yet some of the heat it carries may, thus producing condensation, so that in general the mixture in the cylinder is a mixture of steam and condensed water.

3rd event. Release. At the point 3, just before the piston reaches the right dead centre, the exhaust valve *E* is opened and the steam is released, escaping either to the atmosphere or to the condenser according as the engine is of the non-condensing or condensing type.

Digitized by Google

The state of the steam as regards volume and pressure is shown by the point 3, Fig. 2. The pressure rapidly falls to the pressure in the exhaust pipe, and the release point should be arranged so that the pressure just about falls to this when the piston arrives at the dead point.

4th event. Compression. During the greater part of the return stroke, the valve E is held open, and a definite weight of steam escapes from the cylinder and the piston moves back against whatever pressure there may be in the cylinder. At a certain point 4, the valve E is closed and a definite weight of steam is shut in the cylinder. As the piston continues its motion beyond the point 4 towards the left dead point, the pressure of the steam gradually rises, until at 1, where the steam valve is opened, fresh steam is admitted and the steam pressure rises to the pressure in the steam pipe.

Thus in a cycle there are four events dividing the operations into four stages. The four stages may be summarised thus:—

Admission stage. During the interval between admission and cut off, E is closed and S is open, and fresh steam is pouring into the cylinder.

Expansion stage. During the interval between cut off and release both S and E are closed, a definite weight of steam is shut in the cylinder, and as the volume increases the pressure falls according to the approximate law $PV =$ a constant.

Release stage. During the interval between release and compression, S is shut and E is open, and the steam is pushed out of the cylinder by the returning piston, the exhaust passages and pipe being large enough to prevent the steam increasing sensibly in pressure.

Compression stage. During the interval between **compression** and **admission** both S and E are closed, a definite quantity of steam is shut in the cylinder, and as the volume decreases as the piston approaches the dead point, the pressure rises approximately according to the law $PV =$ a constant. The different positions of the piston for the four events are indicated by dotted lines, the arrows indicating the direction of motion.

The cycle may conveniently be considered to begin when the piston is at a dead point with the full steam pressure acting on it.

4. Nett work done by the steam during a cycle. The motion of the piston from the left dead point to the right is maintained by the action of the steam pressure, and the work done is represented by the area $AB23CD$ in Fig. 2. The motion of the piston during the return

Digitized by Google

stroke from the right to the left dead point must be maintained against the pressure of the steam in the cylinder; consequently work must be done upon the piston to the extent represented by the area *DC41BA*, Fig. 2. The work required for the return stroke may be drawn from

1. The kinetic energy stored in the flywheel and the other moving parts of the engine;
2. From the potential energy of weights raised during the outstroke;
3. From other cylinders driving the piston through the crank shaft;
4. From steam pressure acting on the right-hand face of the piston.

The fourth case is the almost universal arrangement in the present day. The second case was usual in the early pumping engines. The first case is used almost universally in gas engines, and the third case finds many illustrations in modern high speed engines of the Willans' type. Whichever method be used, the nett work done by the steam on the piston, against all external resistances on the right-hand side of it, during the complete cycle of events is represented by the difference between the areas above mentioned, that is by the shaded area, Fig. 2.

5. **Single- and double-acting engines.** An engine arranged to work as indicated in Fig. 2 is called a single-acting steam engine. In these engines, as just stated, there is always the peculiarity that the return stroke must be provided for by means external to the cylinder under consideration.

If a duplicate set of valves are arranged at the right-hand side of the cylinder, as shown by the dotted lines in Fig. 1, so that the steam passes through the cycle of events described in Art. 3, in the chamber formed by the right-hand part of the cylinder and the right-hand piston face, the engine is termed **double-acting.** This second cycle is shown by dotted lines in Fig. 2.

6. **Instroke and outstroke cycles.** It is necessary to distinguish between the two cycles of a double-acting engine very clearly when considering the valve gear, and this is conveniently done by naming them the **outstroke** and **instroke cycles** respectively. The outstroke cycle is that one of the two which begins when the piston is on the dead point farthest from the crosshead. The instroke cycle begins on the dead centre nearest the crosshead. In the former case the steam pressure is moving the piston rod out, in the second case it is moving it in.

Digitized by Google

In this way the two cycles may be defined without ambiguity for all positions of the cylinder. Thus if the cylinder be placed vertical, the dead points are distinguished by calling them the top or bottom dead point, but whether the crank shaft is above or below the cylinder there is no confusion regarding the cycles. For an engine with a crank and connecting rod a more general way to distinguish between the two cycles is by naming them with the value of the crank angle θ at which they respectively begin. They would then be referred to as the cycle beginning when $\theta = 0$ degree, or the cycle when $\theta = 180$ degrees, or more briefly the 0 degree cycle and the 180 degree cycle respectively.

7. **Specification of a cycle.** An event of the cycle, though primarily determined by a valve, is usually fixed by stating the percentage position of the piston in its stroke at which the event takes place. A percentage scale is drawn on the diagram Fig. 1, placed so that its ends correspond with the dead points of the stroke. From this it will be seen that the four events specifying the cycle indicated in Fig. 2 may be fixed as follows:—

Admission takes place at 98 per cent. of the return stroke;

Cut off takes place at 25 per cent. of the stroke;

Release takes place at 85 per cent. of the stroke;

Compression takes place at 69 per cent. of the return stroke.

This specification refers of course to only one of the two cycles in a double-acting engine. The other cycle may have the same specification or it may be differently specified to satisfy some condition of the design. It is to be observed that the position of the piston is stated with reference to one dead point for cut off and release, and the other dead point for compression and admission.

Digitized by Google

CHAPTER II.

ON STEAM DISTRIBUTING VALVES.

8. **General remarks.** In the early days of the steam engine the entry and exit of steam to the cylinder were controlled by separate valves. In double-acting engines these were duplicated so that there were four separate valves to be operated in order to control the two cycles.

Murdoch patented the "long D" slide valve in 1799, a valve which combined the duties of the four separate valves of a double-acting engine. By giving the valve a to and fro motion across suitably formed ports in the cylinder, the eight events of the two cycles were controlled by a single valve.

In 1802 Matthew Murray patented the "short D" slide valve, a valve which was the same in all essential particulars as the ordinary slide valve in use to-day.

Both the long and the short D valve are described below, the short D valve in the form in which it is used now in Art. 14, and the long D valve as Murdoch described it in his specification in Art. 20.

Though historically second, it will be convenient to describe the ordinary slide valve before describing Murdoch's valve.

After reading the articles devoted to slide valves and their modifications, a consideration of Murdoch's valve will show how little any of the modern valves differ in essential particulars from Murdoch's original design. The long D valve permits the design of short straight steam ways into the cylinder; it is balanced and it is almost a piston valve.

About 50 years ago there was a return to the four separate valves of the early days of Watt, and to-day there are several types of engines working with "drop valves," the Sulzer engine being a pioneer type.

Four valves of the rocking type were used in connection with the celebrated Corliss engine, patented in America in 1851, an engine which has been developed in this country by Messrs Hick Hargreaves and Co. of Bolton in connection with the Spencer Inglis patents of 1863 and 1865.

Digitized by Google

Thus there are in use to-day three typical kinds of valves for regulating the exit and entry of steam into the cylinder.

1. Lift or "drop" valves, or those which open by lifting.
2. Slide valves, or those which slide across openings or ports.
3. Rocking valves, or those which open by turning instead of by sliding across openings or ports and yet have all the essential characteristics of a slide valve.

A somewhat detailed description of these different kinds of valves will now be given.

9. Lift valves. The commonest kind of lift valve is that shown in Fig. 3, and known generally as a mushroom or mitre valve. When the valve is closed the conical part of the valve rests on a seating similarly coned. To ensure tightness the actual surface of contact between the valve and the seating, that is the space between the chain dotted lines *A*, *B*, should be narrow, and the upper part of the conical surface of the valve may be backed off with advantage as shown in the figure. The valve is guided to its seating by easily fitting wings,

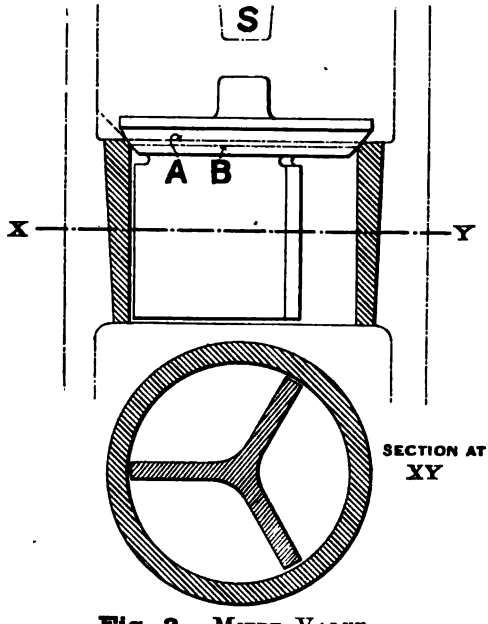

Fig. 3. MITRE VALVE.

shown in the plan, or a central spindle, and its upward motion or "lift" is limited by a stop *S*. Theoretically, the valve is fully opened when the vertical cylindrical surface, measured by the product of the circumference of the valve and its lift, is equal in area to the area of

Digitized by Google

the steam pipe in which the valve is placed or which the valve is required to supply. Practically, more lift than this should be given, otherwise the steam will drop in pressure during its passage through the valve, by an amount depending upon its velocity.

This type of valve is quite unsuitable for use as a distributing valve for a steam engine because the force required to lift it against the steam pressures becomes impracticably large as the diameter of the valve and the magnitude of the steam pressure increase. For example, to lift an eight inch valve, which is about 50 square inches area, against a pressure of 200 lbs. per square inch requires a force of 10,000 lbs. weight.

10. Double beat or equilibrium valve. This difficulty existed even with the moderate steam pressures used a century ago, and to surmount it Hornblower invented what is essentially an equilibrium valve about the year 1800. The arrangement is shown in Fig. 4, from which it will be seen that the valve is cylindrical in form and is provided with two seatings, one at *A* and the other at *B*. To lift the valve against a pressure *p* in the pipe *S* requires a force equal to the product of *p* and the difference of areas corresponding to the diameters,

HORNBLOWER VALVES.

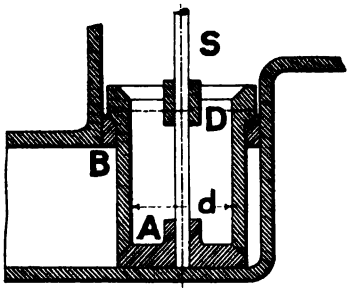

Fig. 4.

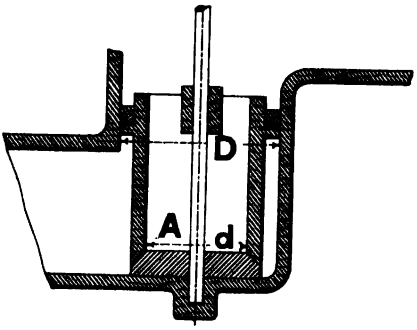

Fig. 5.

D and *d*, of the valve seatings. There seemed to be difficulty in keeping the seats *A* and *B* simultaneously tight, because Tredgold describes what he calls an "Improved Hornblower Valve" where the upper seat *B* is replaced by piston packing as shown in Fig. 5. In this case the valve is lifted against a force measured by the product of the pressure in the pipe and the difference of areas corresponding to the full bore of the pipe *D* and the inner diameter of the valve *d*. In both types of Hornblower's valve steam passed through the lower seat only, so that the capacity to transmit steam was only the same as that of a mitre valve of equal diameter. A modern form of double beat valve is shown in Fig. 6 in place at one end of an engine cylinder. It is provided with two seatings, *A* and *B*, arranged so that the steam

Digitized by Google

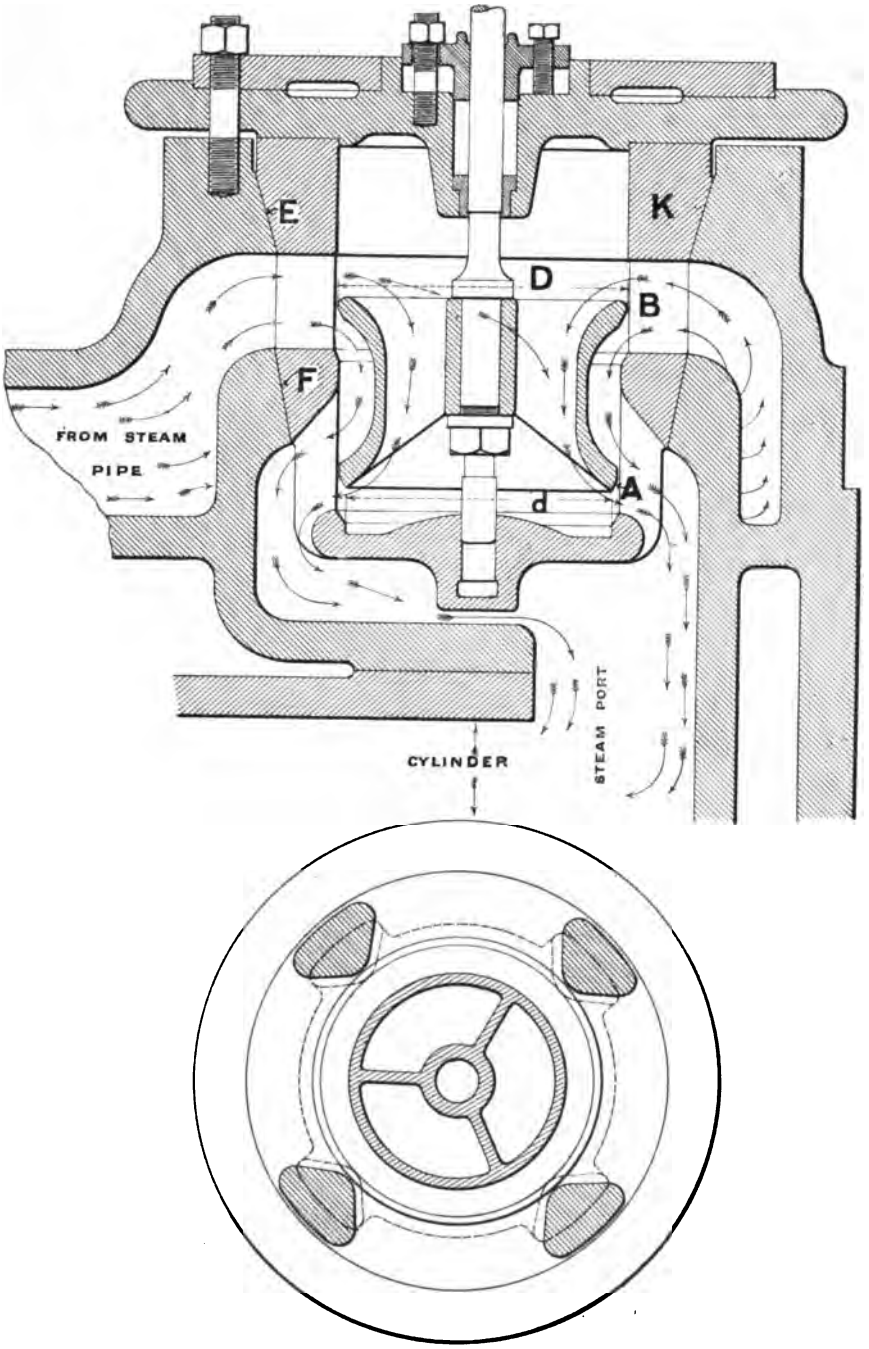

Fig. 6. Double Beat or Equilibrium Valve.

Digitized by Google

has a clear passage through both when the valve is lifted. When closed the steam pressure acts on the difference of areas corresponding to the diameters d and D, that is an area equal to the projected area of the two seatings of the valve on a plane at right angles to the direction of lift.

The diameters d and D in the case of the valve shown in Fig. 6 are respectively 7·5 and 8·2 inches, corresponding to a difference of area, 8·6 square inches. The pressure against which this valve has to be lifted is thus 8·6 multiplied by the pressure in the steam pipe.

For a given lift the opening to steam is equal to that obtained by two valves each 7·86 inches in diameter.

The method of fitting the valve should be noted. The two valve seatings are formed in a casting which fits into two deep conical seats E, F. The cover to this carries the stuffing box for the valve spindle. The studs for holding the cover down are fixed into the main body of the cylinder casting, so that when the nuts are screwed down the joint is made at the cover and the casting in which the valve seatings are formed is held down on its conical seats.

11. **Four-seated valve.** Fig. 7 shows a valve provided with four seatings. Here a large opening is obtained for a relatively small lift and the exertion of a relatively small force. The area acted upon by the steam pressure in this case is the projected area of the four-valve seatings. This valve and the valve shown in Fig. 6 are examples from a Sulzer engine, the details of which were kindly supplied by Messrs Sulzer Brothers, Winterthur, Switzerland.

12. **Dashpot and spring.** When valves of the double beat kind are used for the admission or exhaust valves of a steam engine they are usually operated by trip gear. That is to say, the valve is lifted off its seat and held open by means of a lever engaging with the spindle, and at the proper instant for closing, the lever is released and the valve is free to drop on to its seat. Thus, in Fig. 7 the rod R, operated by the engine mechanism, in conjunction with the catch or trigger T, engaging the lever A, is able to lift the valve off its seat. At the proper instant the governor mechanism acting through the rod Q turns the trigger about the common pin P and the valve is free to drop. But when a valve of the kind under consideration is lifted off its seat it is in equilibrium as regards the steam pressures and special means must be taken to close it. Usually the valve is loaded with a spring, and to prevent the spring hammering the valve into its seat it is combined with a dashpot, so that the joint effect of the two is to urge the valve gently back into its seatings

Digitized by Google

without shock or hammering. The Sulzer combined spring and dash-pot is shown in connection with the four-seated valve, Fig. 7. The valve spindle is prolonged upwards and terminates in a piston. During the upward motion of the valve and piston the spring is compressed and air is drawn in underneath the piston. When the valve is free from the trip gear, the spring as it closes the valve must at the same time

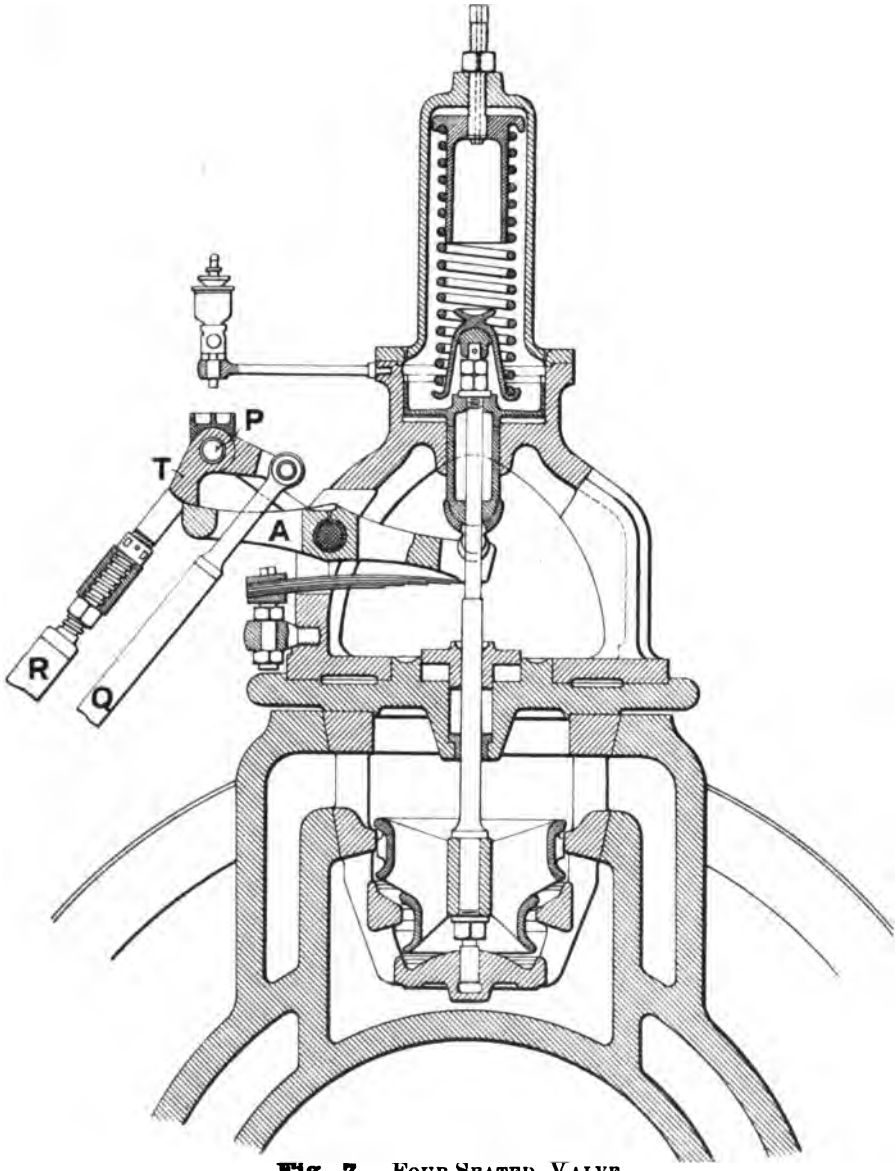

Fig. 7. Four-Seated Valve.

Digitized by Google

force the air out from beneath the piston, and by suitably throttling the exit of the air the valve may be pressed into its seatings almost without a sound.

13. **Effect of heat on double beat valves.** It requires nice work to make a double beat valve properly. The difficulties lie in the fact that two rigidly connected valves have to be made steam tight simultaneously. It is an easy matter to grind one valve into its seat

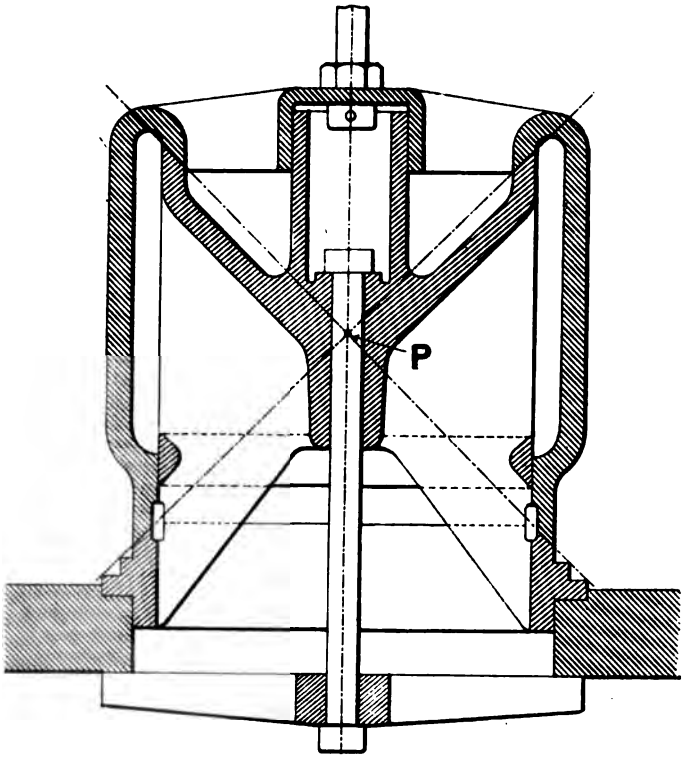

Fig. 8. COLMANN VALVE.

and make a good job of it but to get two seats just right requires considerable skill. Another difficulty in connection with double beat valves is that when they get heated to the temperature of the steam in which they work, the small differences in expansion between the valves and seatings which inevitably occur make them leak although they may be perfectly tight when cold. In the best practice double beat steam valves are finally ground into the seatings at the temperature of the steam in which they are intended to work. Colmann* endeavoured to get over the difficulty of unequal expansion by taking

* Patent Specification, No. 1129. 1877.

Digitized by Google

advantage of the fact that if a cone expands under the action of heat the angle of the cone remains constant. A Colmann valve is shown in Fig. 8. It will be seen that the cones forming the two seats have a common apex. Under the action of heat the seatings are supposed to increase slightly in diameter and to move proportionally farther apart so that the cone angle remains constant. Assuming the valves to increase a little more in diameter than the seatings the respective rings of contact with the seatings will move a little farther apart than the seatings themselves. But inasmuch as the cone angle is constant the rings of original contact on the valve will find a new surface of contact on the valve seatings. The point P may be taken in any position along the axis. When it is in the plane of either seat, that particular seat becomes horizontal. If the seats are parts of spherical surfaces having a common centre P, the valve will have additional freedom to accommodate itself to changes produced by change of temperature. These valves will leak of course if the valve or seatings distort from the truly circular form during expansion.

14. The slide valve. General description. The general shape and arrangement of a slide valve and the steam ports across which it works are shown in Fig. 9. The two steam passages S_1, S_2 connecting the cylinder with the steam chest are in the shape of flattened tubes formed in the cylinder wall itself. Their openings into the steam chest are shaped into narrow slits and are brought close together. Lying between these openings is a wider slit which forms the entry to the passage E, carrying the steam away from the cylinder to the condenser, the atmosphere, or to another cylinder in the case of compound engines. This exhaust passage must be led away so that it clears the steam passages: it is shown curving round the cylinder wall in the figure, appearing in cross section at E_1. The three entrances to these passages, the ports as they are called, are formed into long narrow slits lying close together in order that the valve which moves across them may regulate the different events of the two cycles by a relatively small to and fro excursion across the ports, because the sliding of the valve has to be made against the frictional resistance produced by the steam pressure acting on its back.

The slide valve V is shown lifted vertically off its seat, and from the section in the figure an idea of its shape can be obtained. It may be roughly described as a box lid with a flat rim. A rectangular frame B, forged solid with the spindle D, forming what is called the valve buckle, is dropped over the valve, and the two are placed in the steam chest C, through the end cover G, which may be removed for this purpose. The top steam chest cover H, provided to enable the ports to be machined,

Digitized by Google

is put into its place and the valve is then enclosed in the steam chest but can be moved across the ports from outside by means of the valve spindle *D*. The valve is shown in its central position with regard to the ports in Fig. 10.

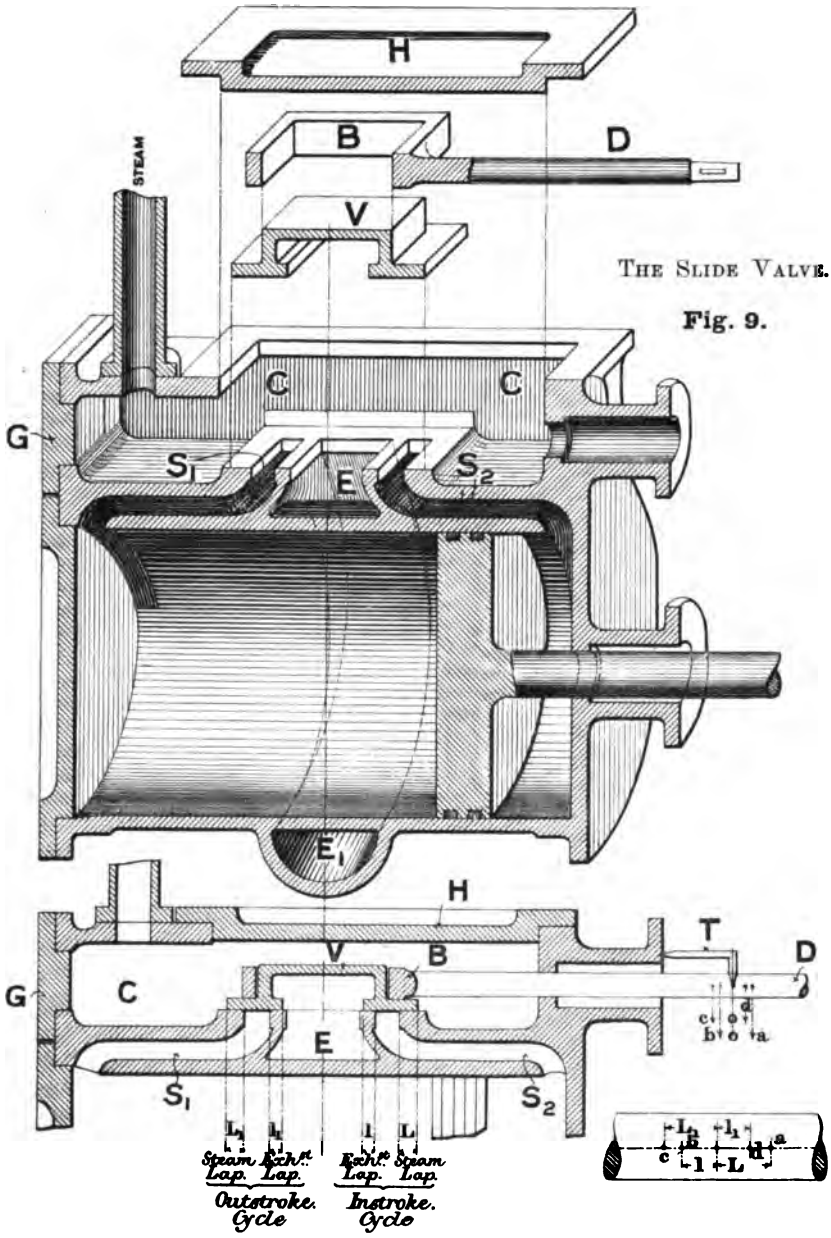

THE SLIDE VALVE.

Fig. 9.

Fig. 10.

Digitized by Google

The valve is pressed upon its seat by the steam pressure acting upon it and hence wear is taken up automatically. The valve must be a loose fit in the buckle in order to allow this action to take place, especially having regard to the fact that gun-metal, of which the valve is usually made, expands at a greater rate under the action of heat than the material of the buckle. There are other ways of connecting the valve spindle to the valve. The method illustrated is used in locomotive practice.

To understand the action of the valve, the section of it shown in Fig. 10 should be re-drawn on a separate piece of paper or card in order that it may be moved to the right or left of the central position shown in the figure. If this be done, it will be observed that a sufficient movement of the valve to the right of the central position will put the left steam passage in communication with the steam chest, whilst at the same time the right steam passage is put in communication with the exhaust passage. A movement to the left will so reverse these connections that the right passage is in communication with the steam chest and the left with the exhaust pipe.

15. Steam and exhaust laps. To study this action more particularly the following definitions must be understood.

Place the valve, Fig. 10, in its central position over the steam ports, then, considering the right edge of the valve, which determines the events of the instroke cycle:—

> The amount by which the valve overlaps the steam port on the admission side is called the **steam lap.** It is marked L in the figure.
>
> The amount by which the valve overlaps the steam port on the exhaust side is called the **exhaust lap.** It is marked l on the drawing.

The dimensions L_1 and l_1 are respectively the steam and exhaust laps for the outstroke cycle.

For the present we may assume that the steam laps are equal and that the exhaust laps are equal for the two cycles.

Sometimes the steam lap is called the outside lap, because steam is generally admitted on the outside of the slide valve, though this is not universally the case. Similarly the exhaust lap is called the inside lap. In order to avoid possible confusion it is better to define the terms as above.

The width of the opening of the port for the admission of steam is given by the distance of the valve from the central position *minus* the steam lap.

The width corresponding to a dead point position of the piston is called the **lead.**

Digitized by Google

The width of the opening of the port for the exit of steam from the cylinder is given by the distance of the valve from the central position *minus* the exhaust lap.

16. Negative lap. When the valve is placed in its central position there may be no overlap, either on the steam or exhaust side of the port, in which case, of course, the valve has neither steam nor exhaust lap. Further, the valve may not even close the ports in its central position, so that there will be a small width of port standing open either on the exhaust or the steam side. In this case:—

The width of the port opening on the steam side is called the **negative steam lap.**

The width of the port opening on the exhaust side is called the **negative exhaust lap.**

The negative lap must be added to the distance of the valve from its central position to find either the opening for steam or exhaust. Negative steam lap is rarely used but negative exhaust lap is more common. For instance it is not unusually employed in express passenger engines in order to prolong the period between release and compression at high speeds.

17. Critical positions. Bearing in mind the definitions just given, and studying the movement with the aid of a valve drawn on a piece of card, the following statements may easily be verified. Consider the instroke cycle.

(1) Admission of steam takes place when the valve is at a distance from its central position equal to the steam lap and the distance is increasing.

(2) Cut off takes place when the valve is at a distance from its central position equal to the steam lap and the distance is diminishing.

(3) Release takes place when the valve is at a distance from its central position equal to the exhaust lap and the distance is increasing.

(4) Compression takes place when the valve is at a distance from its central position equal to the exhaust lap and the distance is decreasing.

Thus the two events of admission and cut off are determined by the steam lap, and each begins when the valve is at the same distance from its central position. Whether the position is that corresponding to admission or cut off depends upon the direction in which the valve is moving at the instant.

Digitized by Google

Similarly the events of release and compression are determined by the exhaust lap and each event begins when the valve is at the same distance from its central position, the position fixing the event of release or compression according to the direction of motion of the valve.

These two positions may therefore be appropriately called the critical positions of the slide valve.

18. Inside steam admission. The slide valve can effect the distribution equally well if steam is admitted on the inside edge and released at the outside edge. In this case the pipe *E* would be connected with the boiler and *S* would become the exhaust pipe, Fig. 9, and the steam lap would be added to the inside of the valve and the exhaust lap to the outside. The steam pressure in this arrangement would now act to lift the valve off its seat, and therefore provision must be made, apart from the steam pressure, to keep it down on the ports. Inside admission is more often used with slide valves of the piston type, to be described presently, than with the type shown in Fig. 9.

19. Marking the valve spindle. The valve may be placed in any one of the critical positions, even when it is shut up in the steam chest, if the valve spindle has been marked in the manner shown in Fig. 10. To mark the spindle use a trammel shaped as shown in the figure, made out of, say, $\frac{1}{4}''$ or $\frac{3}{8}''$ steel, the length to be such that when one end rests in a conveniently placed centre dot on the cylinder itself (it is shown against the flange of the stuffing box in the sketch), the other end is at right angles to the spindle. First, the steam chest cover being off, place the valve in its central position, mark the line *OO* on the valve spindle and put in a centre dot. Consider the Instroke Cycle. Push the valve to the left a distance equal to the steam lap, mark the spindle with the trammel and put in the dot *a*. It can then be brought into this critical position again at any time when the covers are on by merely fitting the trammel to this dot. The dot *b* marks the critical position for release and compression. The dots *c* and *d* similarly mark the critical positions for the Outstroke Cycle. A little consideration will show that when the valve spindle is in any position the application of the trammel to the spindle will fix a point at a distance from the central position, *O*, which distance is the displacement of the valve from its central position. Knowing this distance, the openings of the ports in either cycle may at once be inferred. This method is used in valve setting and will be referred to when that subject is under consideration more specifically. An enlarged view of the marking is shown below the general drawing, Fig. 10.

Digitized by Google

20. Modifications of the typical form. There are many modifications of the typical form of slide valve just described, but in all these modifications the steam and exhaust laps are defined in the same way and they determine the critical positions of the valve for the eight events of the stroke in the double cycle in the way just explained. The two principal objects aimed at in the modified forms are, first, to increase the area of the port opening for steam for a given movement of the valve, secondly to decrease the frictional resistance of the valve to sliding.

Before describing any of the modifications of the short D valve it will be convenient to describe Murdoch's valve. Fig. 11 is copied from Murdoch's specification dated August 1799. The cylinder is in communication with the steam chest through two short straight passages S_1 and S_2. The slide valve working across these ports consists of a tube, D shaped in cross section, carrying at the ends flat plates V_1 and V_2 which slide over the port surface, the semi-annular space between the back of the tube and the inside curved part of the steam chest being packed as indicated in the figure. The steam chest is thus divided into three parts, a central part in communication with the steam

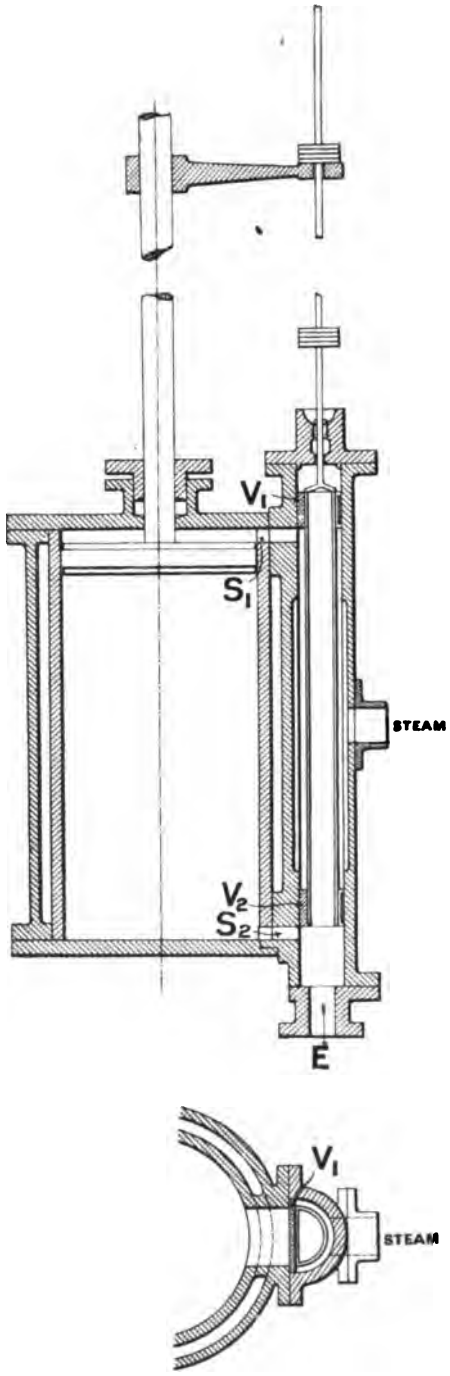

Fig. 11. Murdoch Valve. The long D Valve.

Digitized by Google

pipe, and two end parts in communication with one another through the central pipe and with the condenser at E. Steam is therefore admitted at the inside, and released at the outside edges of the plates, the exhaust steam from the top finding its way to the condenser through the central part of the valve. So far as the distribution of steam is concerned, the valve works with inside admission in the same way that the ordinary slide valve works. The sketch shows also that the valve was operated by an arm fixed to the piston rod striking discs fixed to the valve spindle. The motion of the valve was therefore not continuous. For the greater part of the time occupied by the stroke of the piston it was at rest in a position where the steam had free access to one end of the cylinder, the condenser being in communication at the other end.

21. Trick valve. When the sliding movement of the valve across the ports is continuous, as when operated by the simple eccentric gear, there is only a gradual increase of the width of the opening, so that for a considerable fraction of the time arranged for admission the steam has to make its way through a relatively small area of opening, and in consequence falls in pressure, a loss generally known as "wire drawing." In the Trick or Allan valve, Fig. 12, a passage P is cast in the back, so that when the valve is just opening for steam the usual supply at the

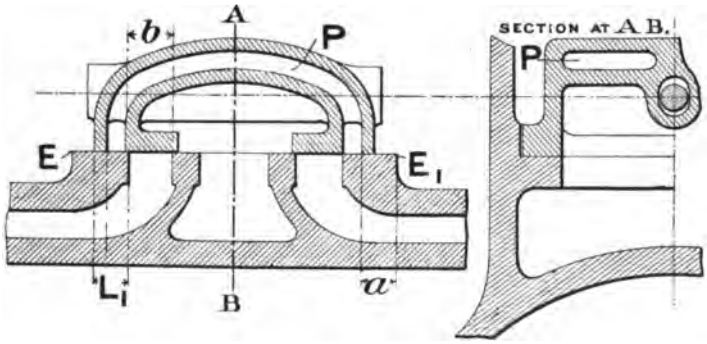

Fig. 12. TRICK VALVE.

edge is supplemented by a second supply introduced into the port through the passage P, the opening and closing of this passage being effected by the edges of the valve seat E and E_1 as the valve slides across them. If the valve Fig. 12 is separately drawn and placed in the critical positions it will be apparent that, considering the admission from the left edge of the valve, the distance a from the inside edge of the passage P to the edge of the seat E_1 must be equal to the steam lap L_1 in order

Digitized by Google

that the steam port and the passage P may open simultaneously. When the valve has moved a distance b to the right of its central position, a further movement to the right increases the width of the opening determined by the steam admission edge of the valve, but decreases the opening of the passage P by an equal amount, so that the opening for steam remains constant until the passage P is entirely closed by the bridge between the steam and the exhaust port. Admission at the right edge of the valve for the Instroke Cycle is similarly supplemented by steam passing through the passage from the left, the edge E controlling admission and cut off so far as the passage is concerned.

In designing a valve of this kind care must be taken that sufficient width exists between the edge of a steam port and the adjacent edge of the exhaust port to prevent the passage P opening communication between the steam chest and the exhaust passage.

22. Double ported valve. A valve designed to secure sufficient port opening with a relatively short stroke, and in general use for the low pressure cylinders of marine engines and known as the double ported valve, is shown in Fig. 13. Here, two steam ports are formed on each side of the exhaust port, and the right side of the valve is provided with two edges B_1, B_2 to give admission at these two ports simultaneously; and corresponding to these are two edges C_1, C_2 which

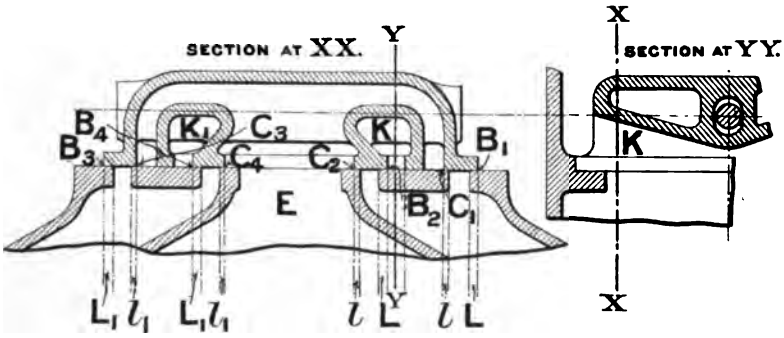

Fig. 13. Double Ported Valve.

open communication with the exhaust passage E. A passage K is formed across the valve to convey steam to the edge B_2. A similar set of edges B_3, B_4, C_3, C_4 determine the distribution at the left side of the valve for the outstroke cycle. The steam and exhaust laps are indicated by L, L, l and l for the instroke cycle and L_1, L_1, l_1 and l_1 for the outstroke cycle.

Digitized by Google

Valves of this kind can be made with three, or even more, ports for each steam way into the cylinder. A section through the intermediate pressure and one of the low pressure cylinders of a battleship engine of 11,000 indicated horse power is shown in Fig. 14, which illustrates, amongst other things, the general arrangement of the triple ported slide valve used with the low pressure cylinders of this engine. The triple ported entry to the steam ways at each end of the cylinder is clearly shown. It will be noticed that the face on which the valve slides is really one face of a plate through which the ports are cut, ports in the cylinder casting corresponding with them. The exhaust port *E* lies between the steam ways.

23. Balancing piston. The weight of a slide valve of a large engine is considerable. The triple ported valve just described weighs 1½ tons, and in the largest engines the weight may be as much as 3 tons. To relieve the valve gear the weight of the valve is taken by a balancing piston *B*, Fig. 14. The bottom of the balancing piston cylinder is in free communication with the steam chest, a clear way being left round the piston rod. The upper part of the cylinder is maintained in continuous communication with the condenser. Thus the difference of pressure per square inch between the lower and the upper sides of the piston is the difference between the steam chest pressure and the condenser pressure. The area of the piston is proportioned to take the weight of the valve and valve gear, less the weight of one eccentric rod.

24. Balanced valves. In recent years the steam pressure used with all types of engines has gradually increased until at the present time 200 lbs. per square inch is not uncommon either in marine or locomotive practice. In consequence of this, methods of relieving the pressure on the back of the valve in order to decrease the frictional resistance to sliding are used much more generally than in the days of lower pressures.

One way of reducing the total pressure on the valve is shown in Fig. 15. A rectangular groove *G* is formed in the back of the valve and metal strips *R* are fitted to the groove. Springs at the bottom of the groove press the strips upwards into contact with a face *F* prepared in the cylinder cover. The strips and the springs are shown removed from the grooves in the valve in the perspective sketch, above the sectional elevation. In this way the area enclosed by the frame is cut off from the action of the high-pressure steam and the frictional resistance of the valve is reduced in proportion. These Richardson strips, as they are called, have been extensively employed in the United

Digitized by Google

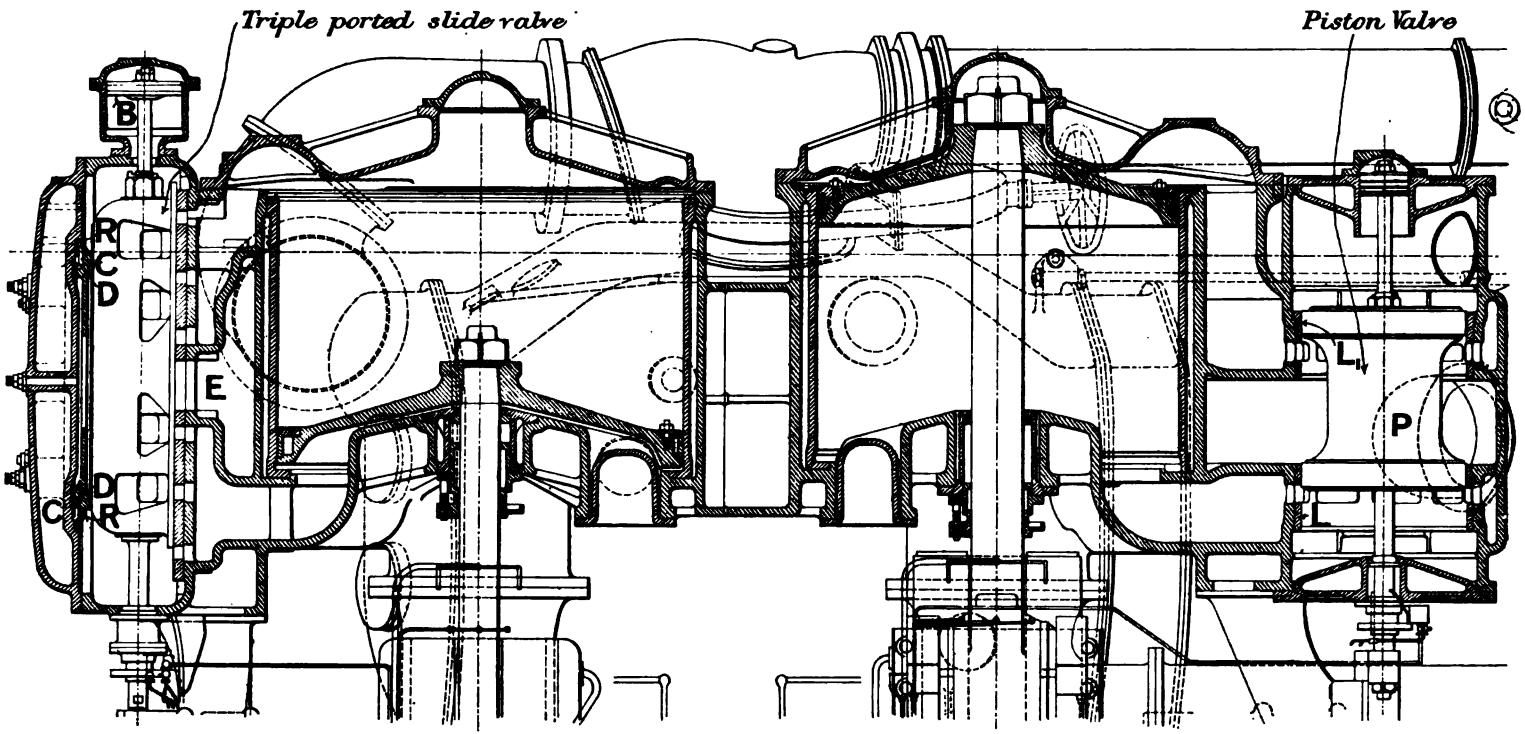

Fig. 14. Piston Valve and Triple Ported Balanced Slide Valve.

Digitized by Google

States. Mr Aspinall*, who has recently made some experiments with a Lancashire and Yorkshire locomotive in connection with this subject, found that the average pull on the valve spindle was reduced from about 1946 lbs. to 854 lbs. by the addition of these strips to the valve. Fig. 15 is in fact a section of the valve with which the experiments were made.

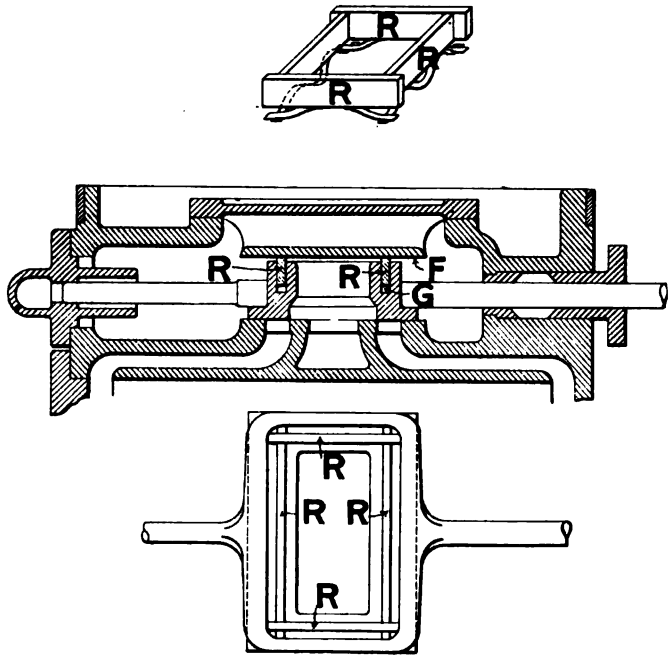

Fig. 15. Balanced Valve. Lancashire and Yorkshire Railway.

Quoting two experiments, with a phosphor-bronze valve of the usual type, the force required at the spindle to push the valve was 1972 lbs. when the pressure in the steam chest was 140 lbs. per square inch. This pressure, allowing for the lifting action of the steam in the passages, produced a nett load on the valve of 19995 lbs. The corresponding coefficient of friction was therefore 0·098. With the Richardson valve shown in Fig. 15, when the steam chest pressure was the same as above, namely, 140 lbs. per square inch, the total nett pressure on the valve was reduced to 8633 lbs., and the pull on the valve spindle was reduced to 760·5 lbs. corresponding to a coefficient of friction 0·088. The coefficient of friction is reckoned by dividing the force required to move the valve by the nett pressure acting on the back of the valve. Mr Aspinall's

* J. A. F. Aspinall, "On the Friction of Slide Valves," *Proc. Inst. Civil Engineers*, Vol. 133.

Digitized by Google

experiments show that the average coefficient of friction for valves working on a vertical face is about 0·068, whilst for an unbalanced valve on a horizontal face it is about 0·088. For the partially balanced valve the coefficient found was slightly higher, being 0·092. A complete account of these experiments, with details of the dynamometer used to measure the force at the valve spindle, will be found in the paper quoted and in an earlier paper in Vol. 95 of the *Proceedings of the Institution of Civil Engineers.* In the discussion of the second paper Mr F. W. Webb stated that instead of four separate strips he had used a rectangular frame milled in one piece, packed round with asbestos cord, with good results.

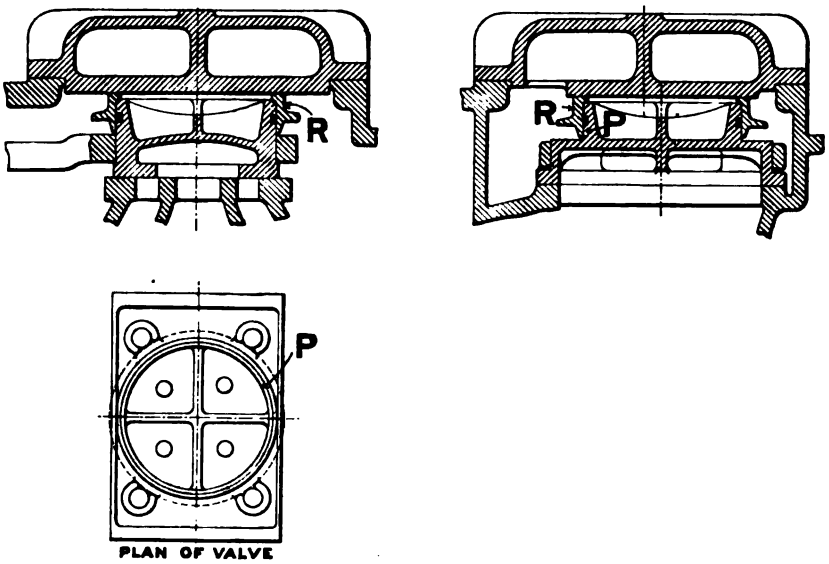

Fig. 16. Balanced Valve. Northern Railway of France.

Fig. 16 shows the slide valve and the way it is balanced in the case of the De Glehn Compound Express locomotives running between Paris and Calais on the Northern Railway of France. The relief frame is in the form of a ring *R*, bored out to fit the circular projection *P* turned on the back of the slide valve.

A relief frame as applied to a large marine engine valve is shown in Fig. 17. Returning to the triple ported valve shown in Fig. 14, its actual size is 5′ 6″ in the direction of its stroke and 5′ 8½″ wide. The area is thus 4521 square inches. A considerable fraction of this is cut off from the action of the steam pressure by the method indicated in the figure, but shown on a larger scale in Fig. 17, which is a section

Digitized by Google

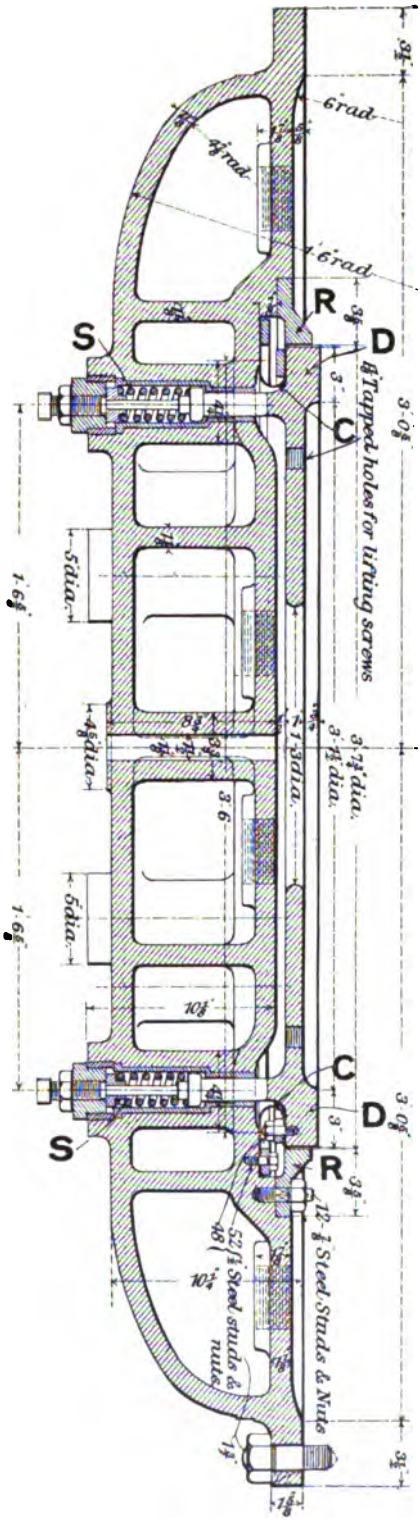

through the cylinder cover and balancing ring. A circular plate *D* is pressed into contact with the back of the valve by springs, two of which are shown at *S* and *S*. This plate is free to move in a direction perpendicular to the port face, being guided by the steel ring *RR*, secured to the cylinder cover by 12, $\frac{7}{8}''$ studs. Steam is prevented from getting behind the plate by means of a flexible copper ring *CC* in the form of a single deep corrugation. This copper corrugation is fastened by one limb to the plate by 48, $\frac{1}{2}''$ studs, and by the other limb to the cylinder cover by 52 studs. The copper corrugation forms a flexible connection between the cylinder cover and the circular plate resting on the back of the valve, the plate is therefore free to move into close contact with the surface of the valve under the action of the springs. In this way an area of 1503 square inches is relieved from steam pressure.

There are other ways of preventing steam from getting behind the balance plate. The method indicated has been used successfully for many years by Messrs Humphrys and Tennant.

In fitting these frames care must be taken that the valve is not relieved too much, since the pressure on the inner side of the valve due to the steam in the passages tends to lift the valve off its seat. A certain quantity of steam is sure to find its way

Fig. 17. Valve Chest Cover and Balancing Plate for Triple Ported Slide Valve.

Digitized by Google

behind the plate as the valve moves to and fro under it, and to prevent the gradual accumulation of pressure from this cause the inside of the relief frame is placed in communication with the exhaust passage or with the condenser.

25. Piston valve. Theoretically the slide valve can be relieved of all pressure on the back by changing it to the cylindrical form, obtaining what is known as a piston valve. Two essential properties of the flat slide valve are lost by this change. The valve is no longer kept up to its seat by the steam pressure, and the valve can no longer lift off its seat against the steam pressure to allow trapped water to escape. When a piston valve is used therefore it is absolutely necessary to provide relief valves on the cylinder to allow water to escape.

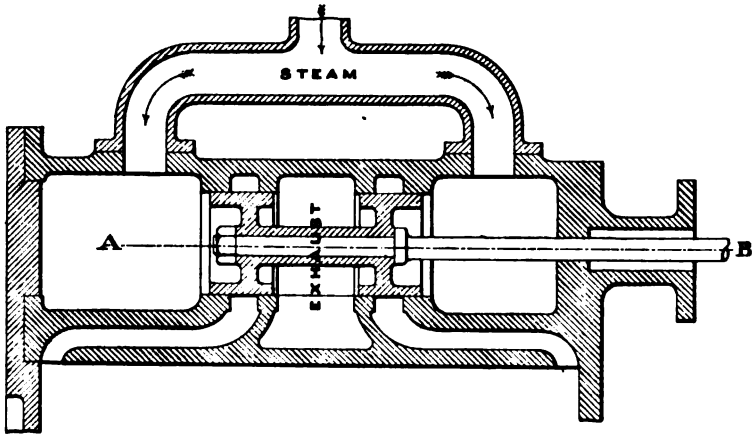

Fig. 18. Piston Valve.

If a thin section of the slide valve shown in Fig. 10 be supposed to revolve about the axis of the valve spindle it will describe a corresponding piston valve in space. The ports of the steam passages, both for supply and exhaust, must now encircle the valve as shown in Fig. 18, and provision must be made for placing the ends of the steam chest or valve chamber in communication with one another. This is generally effected either by casting a passage for the purpose with the valve chest or with the cylinder, or by casting a passage through the valve itself.

This change in form of the valve does not involve any change in the distribution of steam it can effect. The definitions of the steam and of the exhaust laps and of the critical positions are precisely the same in a piston valve as in a valve of the ordinary type.

Digitized by Google

The usual mode of construction adopted with piston valves is shown in Fig. 14. The steam chest is bored out to receive two liners, L and L_1, in which the ports are machined to the correct size. The corresponding ports in the cylinder are cast slightly wider than those in the liner, so that when the liner is forced into its place the ports in it have a fair opening into the steam passages. In some cases the liner is made in one piece and all the ports are cut in it. The piston valve P is indicated in general elevation and it will be seen that its weight is carried by a balancing piston.

A section of the piston valve for the high pressure cylinder of the engine of which Fig. 14 is a part is shown in Fig. 19. This valve

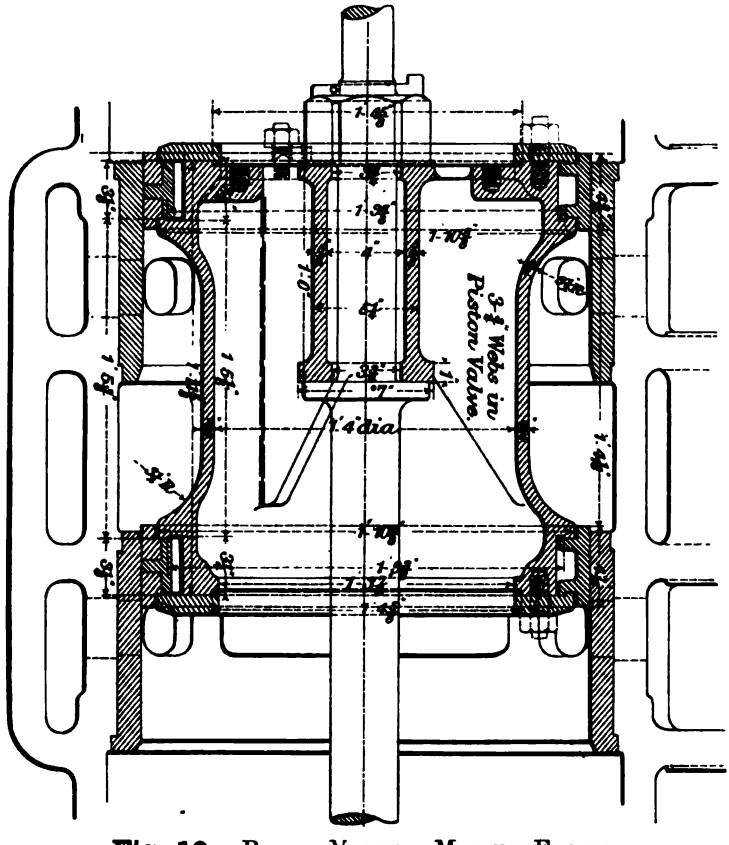

Fig. 19. Piston Valve. Marine Engine.

is two feet in diameter. The cylindrical body of the valve carries a boss inside it supported by three webs, the boss being connected to the valve spindle, which below is continued to the valve gear, and above to a balance piston. The ends of the valve are increased in

Digitized by Google

diameter and are formed into circumferential grooves carrying packing rings. One side of a groove is formed by the addition of a flat steel ring to the end of the valve. The removal of this ring enables the packing rings to be put in place, after which it is replaced and held securely in position by a ring of studs. The packing rings are split and a tongue piece is inserted as indicated, thus leaving the ring free to expand against the liner. The edges of the packing rings form the respective steam and exhaust edges of the valve. The valve shown works with outside steam admission.

Sometimes an uncut floating ring is used for packing the valve. The ring is turned a few thousandths of an inch smaller than the liner in which it works and is free to move a small amount in a radial direction relatively to the valve, so that it can accommodate its position to the small distortions of the liner due to changes of temperature without danger of sticking.

A floating ring can either be put over the end of the valve, being held in its place by a washer or junk ring, or it can be sprung over the end of the valve into a groove turned to receive it in the way discovered by Mr Yarrow*. A floating ring passes a small amount of steam, but the gain in other directions in the opinion of some eminent engineers more than compensates for this. The advantage of this form of packing is that there is practically no frictional resistance to sliding, because the uncut packing ring is actually smaller in diameter than the liner in which it slides; there is therefore no necessity for lubrication. This is an enormous advantage in the case of condensing engines where the condensed steam is returned to the boiler, since the successful working of modern water tube boilers is imperilled if oil gets into them with the feed water. Some makers dispense with even a floating ring and use a solid valve. In this case the design must be carefully considered with regard to the change of form likely to be caused by the change of temperature to which the valve and seat will be subjected.

26. Vauclain valve. Fig. 20 shows the type of piston valve used with the Vauclain Compound Locomotive, built by the Baldwin Company of Philadelphia. This one valve effects the distribution of steam to two cylinders. There are therefore four cycles to be arranged for, namely, the in- and outstroke cycles for the high pressure cylinder, and the in- and the outstroke cycles for the low pressure cylinder. The cycles involve 16 events per revolution. The course of the steam for the position of the valve shown is indicated by arrows. Steam enters the high pressure cylinder for the outstroke cycle at *A* simultaneously

* See *The Engineer*, Jan. 30th, 1903, page 122.

Digitized by Google

with the exit of steam from the instroke cycle at *B*. The steam leaving at *B* finds its way into the centre of the valve, which is designed to have sufficient capacity to act momentarily as a receiver when required to do so. In the figure, however, the way is shown

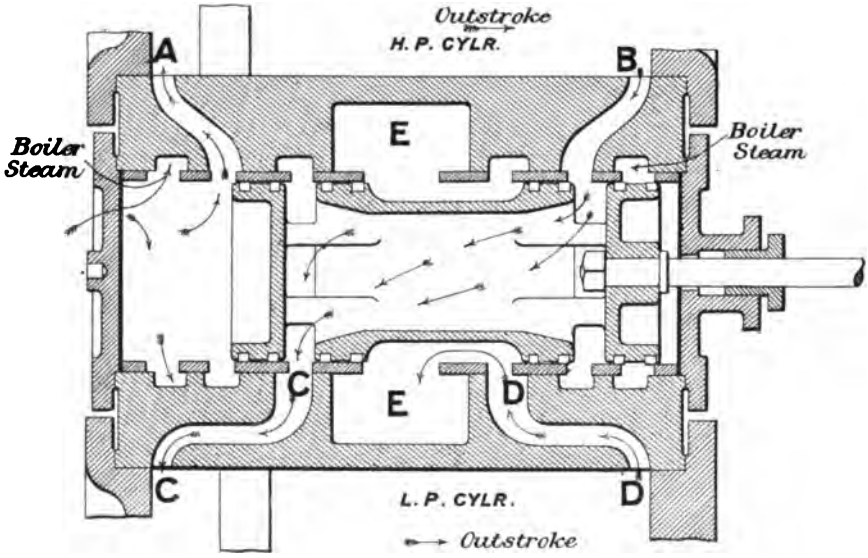

Fig. 20. Piston Valve. Vauclain Compound Locomotive.

open into the low pressure cylinder at *C* and the steam is entering for the performance of the outstroke cycle. Steam from the instroke low pressure cycle is leaving the cylinder at *D*, passing round the valve into the exhaust cavity *E*, which is in direct communication with the blast pipe. If the valve is drawn separately on a piece of card the distribution of the steam can be followed through a revolution, and the two steam and exhaust laps measured without difficulty.

27. **Segmental valve.** A valve which combines the essential properties of the slide valve with part of the advantage of the piston valve has been invented by Mr W. M. Smith* and is used by the North-Eastern Railway Company and in the new compound engines introduced by Mr S. W. Johnson on the Midland Railway. The main object in the design is to obtain a valve which, whilst retaining the advantages of the cylindrical form, will allow trapped water to escape. For this purpose there are two rings of packing at each end, one narrow in width and the other relatively much wider. The wider ring is cut into three

* See Mr Smith's paper in the *Proceedings of Inst. of Mechanical Engineers*, July, 1902.

Digitized by Google

segments S_1, S_2, S_3 (Fig. 21). The head of the valve is formed by clamping a washer W against the main body of the valve B. The washer carries three horns H_1, H_2, H_3 arranged so that they form radial guides for the segments. Two segments S_1, S_2 are shown drawn off these horns. S_3 is in its proper position. Steam gets to the inside of the segments through holes in the washer and presses them on to the liner, and the segments are also free to move inwards a slight distance radially under the action of a sudden rise of pressure in the ports due to the presence of trapped water. The spaces between the ends of the segments are brought over bridges in the steam ports of the liner, two of which are shown at K_1 and K_2. About one-third of the section of

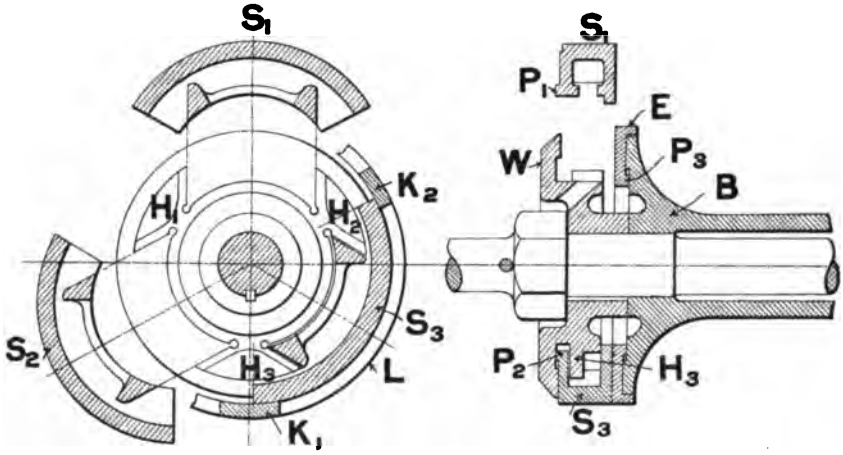

Fig. 21. Segmental Piston Valve.

the liner L is shown in the figure, enough to include the two bridges K_1, K_2 and the part of the steam port between them. The narrower ring E is a piston ring somewhat of the ordinary type, cut in one place and expanding by its own elasticity on to the valve seat. Its object is to prevent the passage of steam through the spaces between the ends of the segments direct into the exhaust cavity. The segments and the ring E are all provided with projecting lips, P_1, P_2, P_3, in order to limit the radial movement outwards and to prevent, as far as possible, broken pieces of the rings getting into the ports in case of fracture. These six segments really constitute a set of small slide valves arranged so that the area acted upon by the steam is a minimum.

In some comparative experiments* made on the North-Eastern Railway the wear of these segments was found to be about 3/32 of an inch for 100,000 engine miles, and the wear of slide valves of the

* Ibid. *loc. cit.*

Digitized by Google

usual type, which were tried in comparison with them under such identical conditions as it is possible to get on a railway, was 25/32 of an inch per 100,000 engine miles. At the Engineering Conference, May, 1897, Mr S. W. Johnson stated that the segmental valves he used with the Midland engines required one-sixth of the power necessary to work the ordinary slide valve, whilst the loss by wear was also about one-sixth.

28. Rocking valve. The essential features of this type of valve are the same as those of a slide valve. The valve oscillates to and fro about some central position, but the motion is an angular oscillation about the axis of the valve spindle instead of a linear motion in the direction of the valve spindle.

Fig. 22 shows a rocking valve arranged to perform all the functions of a slide valve. The central portion of the valve is shown separately above the section, and the valve spindle again, separately above the valve. It will be observed that a squared part of the spindle engages the valve along a slot formed in the back. By this arrangement the valve is free to find its seat under the action of the steam pressure, and free to lift off its seat to allow trapped water to escape.

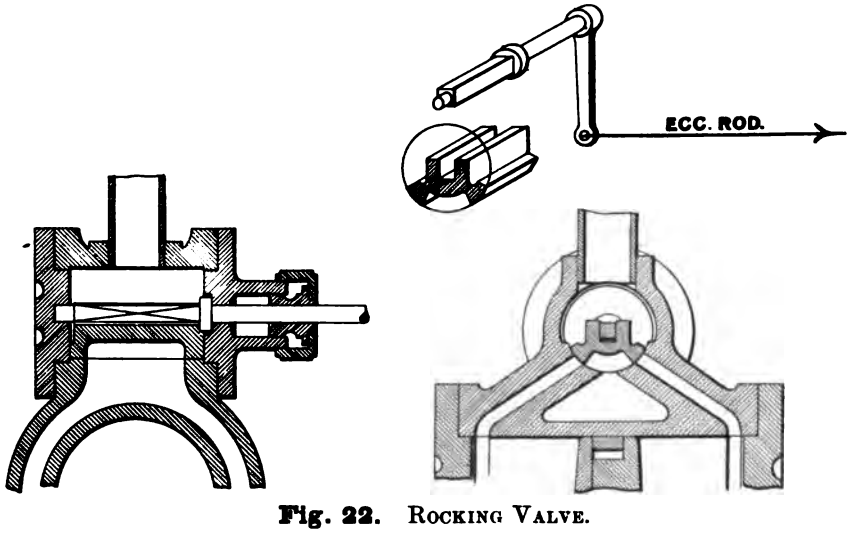

Fig. 22. Rocking Valve.

It is unusual to effect the distribution of steam by one valve of this type. The usual practice is to provide four separate valves, two at each end of the cylinder, the valve spindles being parallel to one another and at right angles to the vertical plane containing the cylinder centre line.

Digitized by Google

The general arrangement of four "Corliss valves" of this type is shown in Fig. 23. The valves S and E are respectively the steam and exhaust valves for the outstroke cycle: S_1 and E_1 being those for the instroke cycle. The valve chambers in which S and S_1 work are connected by the steam passage P, this passage itself being in communication with the main steam pipe through the stop valve. The advantage of this arrangement is that the steam passages from the valve chambers into the cylinder are short, as will be seen in the figure, and therefore the clearance spaces are reduced to a minimum.

A cross-section through the valve chambers for the outstroke cycle across BB is shown in Fig. 24. Considering the arrangement of the steam valve S more particularly, it will be observed in Fig. 24 that the ends of the valve spindle are well supported by the covers of the valve chamber, one end of the spindle being brought through a gland, so that by suitable connection with the valve gear mechanism it may receive an angular oscillation.

The valve itself engages with the valve spindle by means of slots cut across the ends, as shown in the separate drawing of the steam valve, Fig. 25. The spindle, Fig. 26, is squared at A, and carries a rectangular cross-piece or hilt at B. The internal diameter of the valve is large enough to allow the spindle to be pushed through it up to the hilt, and when it is in its proper place the squared part A rests in the slot at one end of the valve, whilst the hilt rests in the slot at the other. The valve is ribbed at intervals R, R, R, and these ribs find corresponding ribs to support them in the valve chamber at r, r, r*.

By the arrangement shown, the angular motion which the valve spindle receives from the valve gear is communicated to the valve, whilst the valve is left free to find its seat on the curved port surface under the action of the steam pressure or to lift off in order to allow trapped water to escape.

The angular displacement, β, which must be given to the valve spindle to move the edge of the valve through a given distance L is easily calculated. Thus, if u is the radius of the port surface, the angle in radians through which the lever on the valve spindle must be turned in order to move the edge of the valve a distance L is given by

$$\beta = \frac{L}{u}.$$

The steam valves of engines fitted with valves of this type are commonly worked by means of a trip gear which is under the control of the governor. The angular oscillation they receive is of the quick return

* I am indebted to Messrs Hick Hargreaves and Co. for the drawings on page 34.

Digitized by Google

Fig. 25.

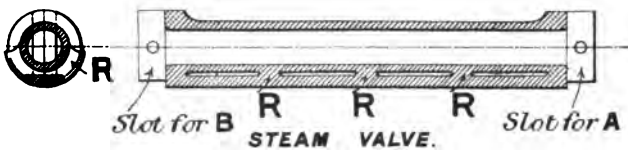

Fig. 26.

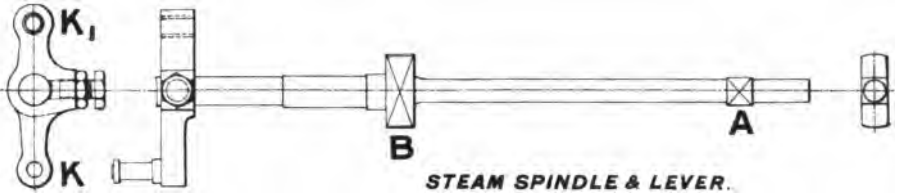

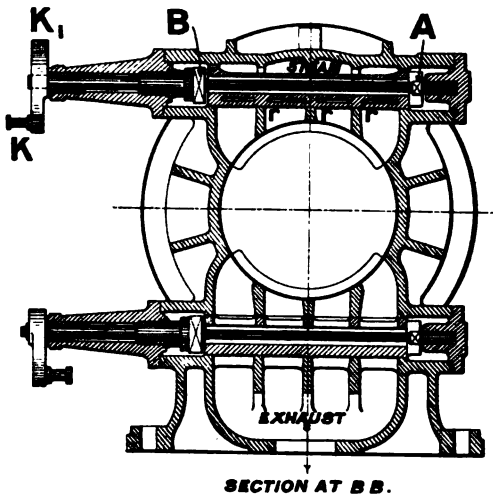

Fig. 24.

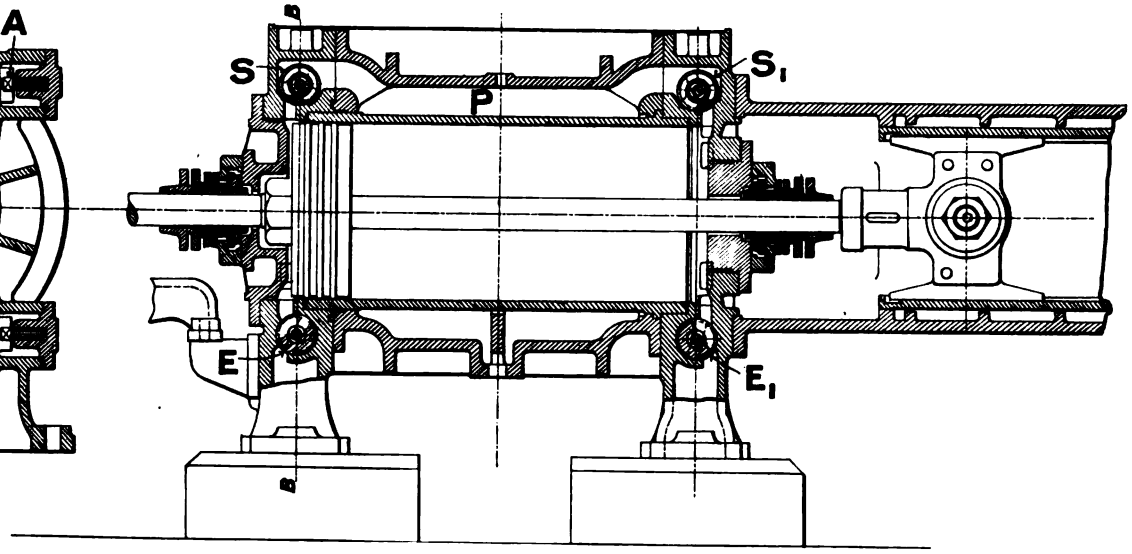

Fig. 23.

CORLISS CYLINDER WITH DETAILS OF VALVES AND SPINDLES.

Digitized by Google

type. That is to say, the valve is opened by the motion of the valve gear link work, and at some point in the stroke, determined by the governor, the valve is suddenly disconnected from the valve gear, and a powerful spring which is connected to the lever at K_1, closes the valve quickly, the rate of closing being controlled by a dashpot.

The gear operating the exhaust valves is unprovided with trip gear, and the angular motion in one direction is an exact repetition of the motion in the other direction.

29. The inertia of a valve. The resistance to be overcome at the valve spindle, to move the valve against the friction produced by the steam pressure acting on it, has been discussed in Art. 24. In high speed engines the resistance to motion due to the inertia of the valve must be added to this in order to get a correct idea of the force to be overcome. If W is the weight of a slide valve, a the acceleration at any instant, this force is given by

$$\frac{W}{g} \times a.$$

The acceleration of the valve's motion can easily be calculated in the case of the simple eccentric gear, and it is not difficult to estimate it approximately in any ordinary case. General methods of finding the acceleration are discussed in Chapter IX.

To give some indication of the magnitude of the force, suppose an ordinary slide valve, weighing 200 pounds and having a stroke of 6 inches, to make 800 strokes per minute, and that the motion is of the simple harmonic kind, that is to say, the motion due to a crank and a relatively long connecting rod.

The acceleration at each end of the stroke is

$$\omega^2 r = 4\pi^2 n^2 r,$$

where n is the number of revolutions of the crank per second, r is the radius of the crank in feet. In the case supposed, this is numerically equal to 437·5.

The force exerted by the valve spindle to start the valve at the end of each stroke is therefore

$$\frac{200}{32 \cdot 2} \times 437 \cdot 5 = 2720 \text{ lbs. app.}$$

At the centre of the stroke this force becomes 0 and changes sign.

In the case of a rocking valve, the couple, acting on the lever of the

Digitized by Google

valve spindle, which is required to produce an angular acceleration of A radians per sec. per sec., is given by

$$C = \frac{I}{g} \times A,$$

where I is the moment of inertia of the valve and the spindle, about the axis of oscillation. If Q is the distance between the centre of the valve spindle and the centre K, at which the force is applied, the force corresponding to this couple, acting at right angles to the lever, is given by the quotient

$$\frac{C}{Q}.$$

Digitized by Google

CHAPTER III.

THE CRANK AND CONNECTING ROD.

30. The crank and connecting rod. General description. Since the motion of the piston is controlled by a crank and connecting rod mechanism in nearly all the modern forms of the steam engine, it will be convenient to describe the geometric properties of this mechanism first.

The general form of the mechanism is too well known to need any special description. A drawing of it is shown incidentally in Fig. 77. In Fig. 27 OK is the crank and KB is the connecting rod. The end of the connecting rod is constrained to move in a straight line by the slide bars, the connection between the sliding blocks and the end of the rod being made by the crosshead. The piston rod is fixed to the crosshead, so that the motion of the piston, the piston rod, and the crosshead is the same. Hence the motion of the piston may be represented by the motion of any one of the points in the reciprocating mass. It is usually convenient to take the centre of the crosshead pin for this purpose.

The stroke of the piston, that is, the distance between the dead points, is constant and equal to twice the crank radius.

In what follows, the mechanism is restricted to the arrangement where the line of stroke, produced, passes through the centre of the crank shaft.

31. Determination of the piston position corresponding to any given value of the crank angle. The position of the piston in relation to its dead points is determined by the following simple geometrical construction.

> Set out the centre line of the cylinder, Fig. 27: draw the crank in any position as OK, and from the crank pin axis as centre, and with a radius equal to the length of the connecting rod, draw an arc cutting the line of stroke at B. The point thus determined fixes the position of the centre of the small end of the rod. Arcs drawn with the same radius from the centres 0 and 6 fix the dead points of the small end of the rod. Every point in the reciprocating mass

Digitized by Google

has the same motion as the centre of the small end of the connecting rod. The point B in the line of stroke may therefore be taken to represent the centre of the piston, and the points 0 and 6 the dead points of the piston.

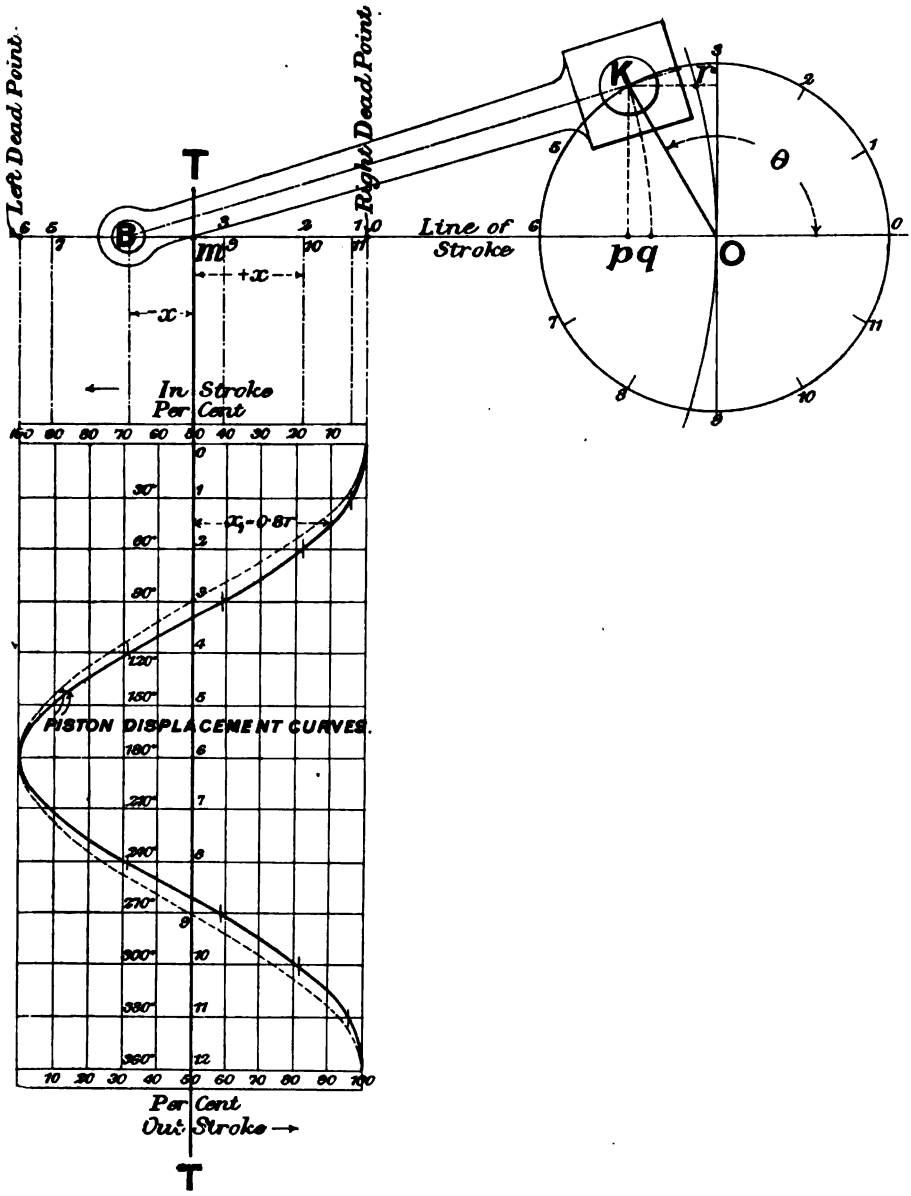

Fig. 27. Piston Displacement Curves.

Digitized by Google

Repeat this construction for several equidistant positions, 12 say, of the crank, obtaining thereby the corresponding positions of the piston in the line of stroke. Then the distance of the piston, corresponding to any one of the 12 equidistant values of the crank angle, may be measured from either of its dead points.

32. **Piston displacement curve.** It is an easy matter to extend the results of these twelve constructions so that the piston position may be fixed for any given value of the crank angle θ. To do this, draw a vertical line TT through the point m, bisecting the distance between the dead points 0, 6, Fig. 27. Take any convenient length on TT, as 0—12, and divide this length into the same number of equal parts as the equidistant positions of the crank divide the circumference of the crank circle. Through each division draw a line at right angles to TT. The distance between each one of these horizontal lines corresponds to a certain change in the crank angle. This change is 30 degrees in Fig. 27. The part 0—12 of TT, may be looked upon as the circumference of the crank circle developed into a straight line, and set out to some convenient scale. Instead of numbering the points where the horizontals cut TT, 0 to 12, they may be numbered to give the angular position of the crank in degrees. This alternative numbering is shown in Fig. 27 by the figures to the left of TT. Now project the 12 points giving the positions of the piston in the line of stroke on to the correspondingly numbered lines below, and draw a smooth curve through them as shown by the thick full line. This curve is called the **piston displacement curve.** By means of it the piston displacement can be found at once for any given value of the crank angle θ by merely finding θ on TT, and measuring the horizontal distance from TT to the curve.

If the stroke be divided into ten equal parts, and corresponding lines be drawn parallel to TT dividing the diagram vertically into ten equal parts, the piston position can be read off, as a percentage of the stroke reckoned from either dead point. In the diagram, Fig. 27, the upper scale corresponds to the **instroke,** and the lower to the **outstroke.**

33. **Example.** Find the piston displacement when $\theta = 45$ degrees;

(1) from its central position,

(2) from the right dead point,

(3) from the left dead point.

Finding 45 degrees on TT and measuring the horizontal distance x_1 to the curve, the answers are:—

Digitized by Google

(1) $x_1 = 0{\cdot}8 \times$ the crank radius,

(2) ten per cent.,

(3) ninety per cent.

Notice that each of the three answers is numerically the same if the angle θ is $(360 - \theta) = 315$ degrees.

The difference in the two cases is that, when $\theta = 45$ degrees and is increasing in value, x_1 is decreasing in value, but when $\theta = 315$ degrees, and is increasing in value, x_1 is increasing in value.

Again, let $\theta = 90$ degrees, then $x_1 = 0{\cdot}172 \times$ crank radius. Or in percentages, the piston is 41 per cent. of its stroke from the right dead point or 59 per cent. from the left dead point. These values are precisely the same for the angle 270 degrees.

In general, however, the displacements corresponding to two crank positions 180 degrees apart, are unequal except for the values 90 and 270 degrees, and of course 0 and 180 degrees.

34. Alternative construction. The displacement diagram may be drawn in a slightly different and sometimes more convenient way as follows :—

Take any crank angle θ, Fig. 27, and find the corresponding position, B, of the centre of the small end of the connecting rod as before, for number 4 crank position, say. Using this point in the stroke as centre, draw an arc through the crank pin centre K, cutting the line of stroke produced in q. Then it is clear that the distance Oq is equal to mB, the actual displacement of the piston from its central position. Points similar to q are to be found for the twelve equidistant positions of the crank. The part of the line of stroke cut off by the crank circle will then be divided by the several points q in the same way that the stroke is actually divided by the corresponding positions of the piston. To draw the displacement curve, take TT at right angles to the line of stroke so that it passes through O, the centre of the crank shaft, then project each point q on to the corresponding horizontal line below, as before, and sketch in the curve.

35. Use of a template to find q. If the displacement curve is to be drawn full size, or even to a large scale, the fixing of the several piston positions in the line of stroke, and the drawing of the corresponding arcs through the crank pin centres, will usually require a trammel some feet in length. The arc Kq, Fig. 27, may however be drawn without finding the corresponding centre point B in the stroke,

Digitized by Google

and without using a trammel at all. This is done by means of a template so fashioned that the edge *ARB*, Fig. 28, is curved to the radius of the connecting rod, and the other edge *CQD* is straight and truly at right angles to a radius of the curve *QR*, which radius is to be marked on the template. To draw the arc 4*q*, place the template as shown in Fig. 28, so that the radius *QR* lies in the line of stroke, and the curved edge passes through the point 4 on the crank circle. The

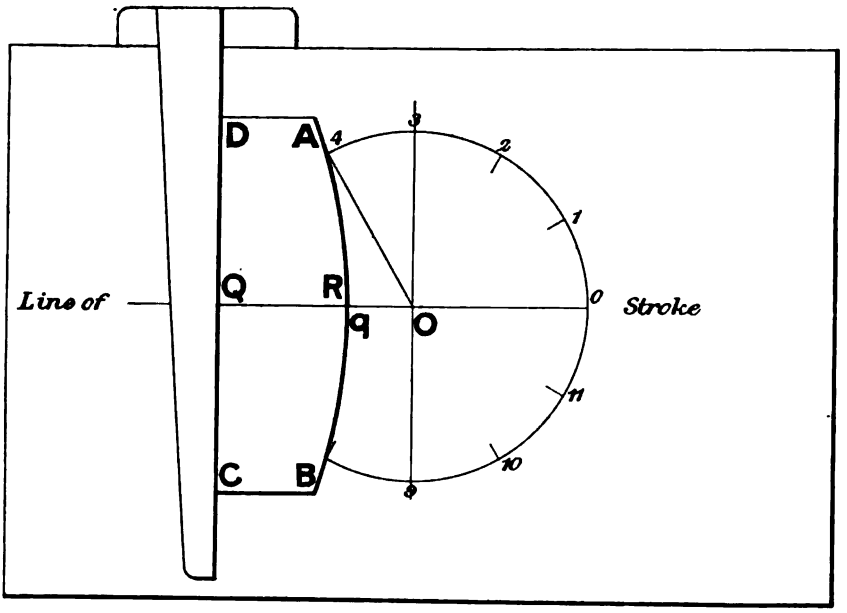

Fig. 28. Use of a Template to find *q*.

placing of the template in this position is much facilitated if the straight edge *CQD* is worked off a T square, as shown in the figure. Care must be taken that the top edge of the drawing board is truly at right angles to the usual working edge.

In this way the positions of the piston may be found relatively to the dead points for stated crank angles without drawing anything but the crank circle. The displacement curve may then be constructed in the way already explained.

36. On the effect of changing the proportion between the length of the connecting rod and the crank radius.

The form of the displacement curve depends upon the ratio of the length of the connecting rod to the length of the crank only. As the length of the rod increases relatively to the crank, the displacement

Digitized by Google

curve, Fig. 27, continually approaches the form of the dotted curve shown on the diagram. In the limiting case, where the rod becomes infinitely long, the dotted curve becomes the displacement curve. In this limiting case the displacement Op of the piston is given in terms of the crank radius, r, and crank angle θ by

$$Op = r \cos \theta,$$

a minus value of Op, showing that the piston is to the left of its central position. The piston displacement curve in this case may be constructed by plotting this expression.

The curve in Fig. 27 is drawn for the case where the connecting rod is three times the length of the crank. The distance qp, in Fig. 27, shows the difference in piston position corresponding to the case of an infinitely long connecting rod, and one three times the length of the crank, when the crank angle is θ. The difference for any crank angle is the horizontal intercept between the dotted and full displacement curves. This difference decreases rapidly as the ratio of the length of the connecting rod to the length of the crank increases.

37. Piston displacement curve on big end base. Referring to Fig. 27, it will be seen that if an arc be drawn through the crank shaft centre O with radius equal to the length of the connecting rod, the horizontal distance between it and the arc drawn through the crank position K will be constant, since both curves are drawn with the same radius from centres a horizontal distance apart equal to Oq. It follows that the horizontal distance rK is equal to Oq, and hence rK represents the displacement of the piston from its central position. This construction is true for any position of the crank pin, and the following simple method therefore may be used to find the piston displacement.

With a radius equal to the length of the connecting rod, and from the central position of the crosshead as centre, draw an arc of a circle through the centre of the crank pin circle. The horizontal distance between the crank pin and this arc is then equal to the displacement of the piston from the centre of its stroke. The crank pin circle thus becomes the piston displacement curve with reference to this curved base. This central arc is conveniently referred to as the **big end base,** because it is the path the big end would move in, if the horizontal motion of the crosshead were suppressed.

This method of finding the piston displacement is sometimes very useful.

38. The polar diagram. The displacement x of the piston from its central position may be set out along the corresponding position

Digitized by Google

of the crank radius, as shown in Fig. 29. A curve joining up the ends of these radial quantities forms a **polar displacement curve.** The complete curve is like a figure 8, since twice during the revolution the piston passes through its central position where $\dot{x} =$ zero. In this diagram the distance of the piston from its central position corresponding to a given value of θ is the part of the crank radius cut off between the centre O and the curve. Thus, when $\theta = 60$ degrees, the piston is at a distance $Or = 0{\cdot}56r$ from its central position. The disadvantage of this form as a practical diagram is that when the crank is in the region where x is nearly zero, it is difficult to measure x accurately because the crank itself is almost parallel to the curve, and the points of cutting are therefore somewhat indeterminate.

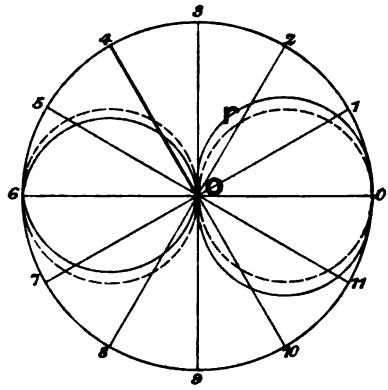

Fig. 29.

PISTON DISPLACEMENT CURVES. POLAR FORM.

As the ratio of the length of the connecting rod to the length of the crank increases, the displacement curve continually approaches the form of two dotted circles touching at O, the diameter of each circle being equal to the radius of the crank. In the limiting case where the rod becomes infinitely long, the two circles themselves become the displacement curve. Thus the two circles in the polar diagram, Fig. 29, represent the same conditions as the dotted or cosine curve in Fig. 27.

Digitized by Google

CHAPTER IV.

THE SIMPLE ECCENTRIC GEAR.

39. Description. This gear is the type most commonly used when the crank shaft is required to turn in one direction only. Its essential features are shown in Figs. 30 and 31. Keyed to the crank

Fig. 30.

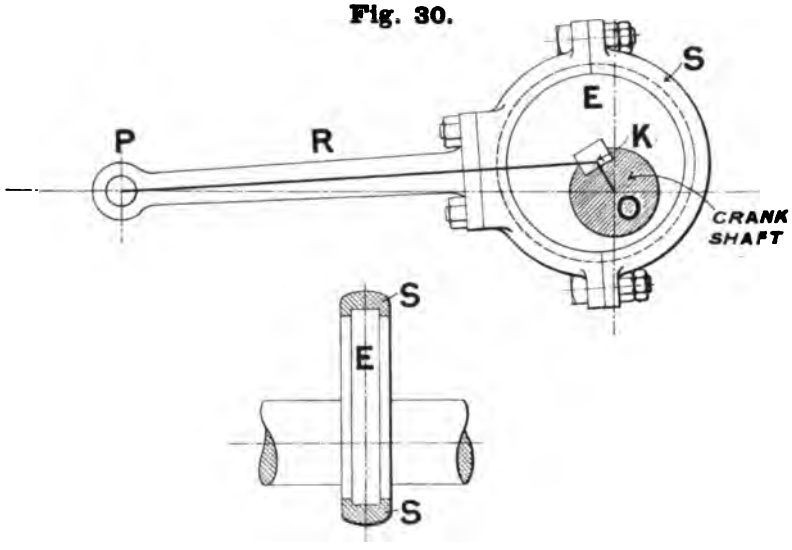

Fig. 31.

SIMPLE ECCENTRIC GEAR.

shaft is the eccentric sheave *E*, which is merely in principle a flat disc with the hole for the shaft placed eccentrically through it. The sheave is usually made in two halves, bolted together. Surrounding the sheave is the eccentric strap *S*, put on in two halves, and held laterally by the grooving together of it and the sheave, as shown in the section, Fig. 31. The strap is bolted to the eccentric rod *R*, which is jointed to the valve spindle at *P*. The movement of the valve is the same as the movement of the point *P*. As the shaft turns, the point *P* receives a to and fro

Digitized by Google

motion which, with properly proportioned parts, enables the slide valve to effect a distribution of steam suitable for driving the engine.

40. Eccentric gear equivalent to a crank and connecting rod. The names and the form of the parts in the simple eccentric gear disguise the fact that, so far as the motion given to the point P is concerned, the gear is equivalent to a crank and connecting rod. This geometrical identity is readily seen if the crank pin belonging to an ordinary crank shaft is imagined to increase gradually in diameter until it is large enough for the shaft to pass through it. It grows, in fact, into an eccentric sheave, so that the distance from the centre of the crank shaft to the centre of the sheave, called the eccentricity, is the crank radius corresponding to the sheave: and the distance from the centre of the eccentric strap to the centre of the pin P is the length of the corresponding connecting rod. The names of the corresponding parts in the two gears are compared in the two columns below:—

Crank and connecting rod gear		Eccentric gear
Crank pin	is equivalent to	Eccentric sheave.
Crank radius	" " "	Eccentricity or eccentric radius.
Connecting rod	" " "	Eccentric rod.
Big end	" " "	Eccentric strap.
Stroke of piston	" " "	Travel of valve.
Stroke = 2 × crank radius		Travel = 2 × eccentricity.

In dealing with any problem concerning the motion imparted to a slide valve by an eccentric gear, it is therefore only necessary to treat it as a crank and connecting rod problem in which the eccentricity of the sheave is used for the crank radius, and the length of the eccentric, from the centre of the pin to centre of strap, is used for the length of the connecting rod.

The crank and connecting rod equivalent to the eccentric gear shown in Figs. 30 and 31 is indicated in Fig. 30 by thick lines, OK being the eccentricity and KP the length of the eccentric rod.

41. Displacement diagram of the valve centre. Assume for the time being that the crank in Fig. 27 represents the eccentricity of a sheave, the connecting rod representing the length of the eccentric rod. The displacement curve for the valve centre would then be identical with the piston displacement curve in Fig. 27 and would be drawn in exactly the same way. The peculiarity of the simple eccentric gear compared with crank and connecting rod mechanism is, however, that the ratio of the length of the eccentric rod to the eccentricity is usually so large that the displacement curve of the valve is not sensibly different from the displacement curve corresponding to an infinitely long eccentric rod.

Digitized by Google

42. Angular difference between the main crank and the eccentric radius.

A. *Steam taken on the outside of the valve as explained in Art.* 14. In order that the motion given to the slide valve by the eccentric gear may be properly timed to determine the distribution of steam described in Art. 3, the sheave must be placed on the crank shaft so that the eccentric radius stands at an angle ϕ with the main crank. Thus, if the position of the main crank is specified by the angle θ, as shown in Fig. 32, the corresponding position of the eccentric radius for positive rotation is given by

$$(\theta + \phi)$$

and the corresponding displacement of the valve from its central position, by x.

Fig. 32.

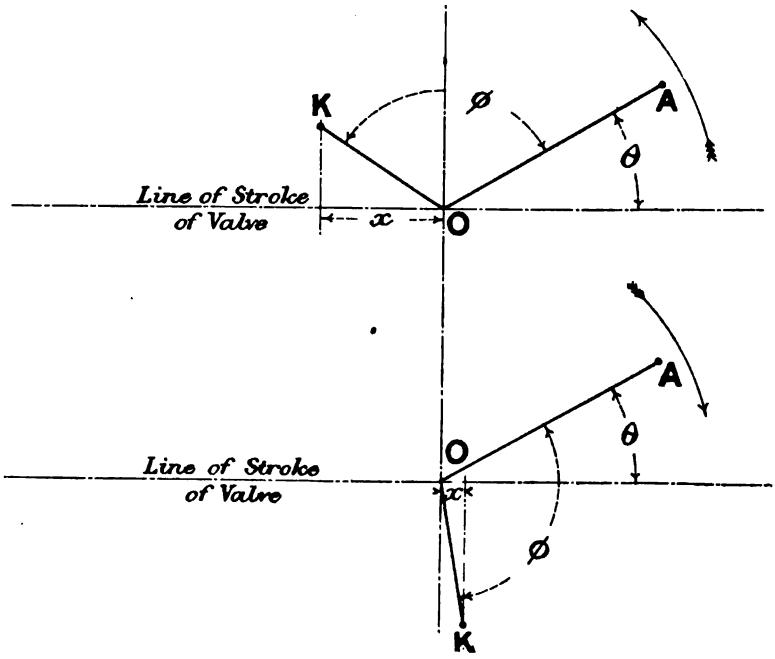

Fig. 33.

ANGULAR DIFFERENCE BETWEEN THE MAIN CRANK AND ECCENTRIC CRANK FOR THE TWO DIRECTIONS OF ROTATION WHEN STEAM IS TAKEN ON THE OUTSIDE OF THE SLIDE VALVE.

It is important to notice that, with outside admission, the eccentric angle is measured in advance of the main crank and is greater than 90 degrees. If for instance the main crank were revolving in the

Digitized by Google

clockwise direction, Fig. 33, the angle ϕ would be set out as shown. In this case the position of the eccentric crank at any instant would be given by the angle

$$(\theta - \phi)$$

and the corresponding displacement of the valve from its central position, by x. It should be noticed in this latter case that the angle θ decreases with the time. In the first case the angle increases with the time. In this way the difference between the two directions of turning is mathematically stated.

Why this angular difference is necessary will be made clear in the valve diagram about to be explained.

B. *Steam taken on the inside of the valve as explained in Art.* 18.

In this case the eccentric must be placed on the shaft behind the crank at an angle which is always less than 90 degrees. The relative

Fig. 34.

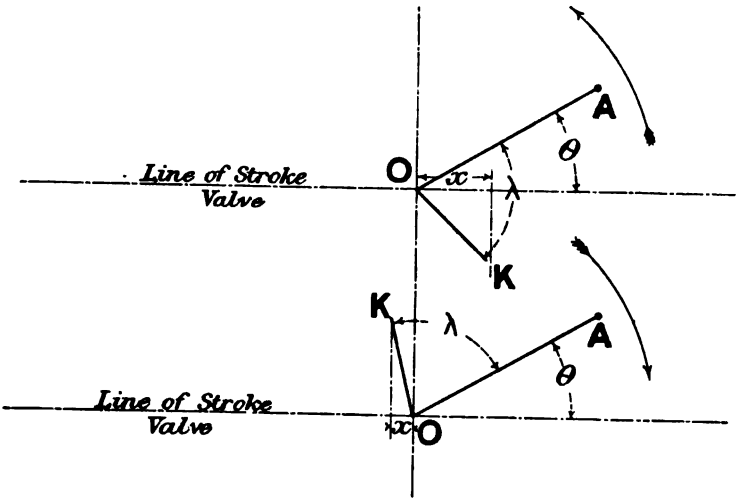

Fig. 35.

ANGULAR DIFFERENCE OR LAG BETWEEN THE MAIN CRANK AND ECCENTRIC CRANK FOR THE TWO DIRECTIONS OF ROTATION WHEN STEAM IS TAKEN ON THE INSIDE OF THE SLIDE VALVE.

positions for clockwise and counterclockwise running are shown in Figs. 34 and 35. It will be seen that the angle at any instant between the eccentric radius and the line of reference is

$(\theta - \lambda)$ for counterclockwise running, and that x is the valve displacement,

$(\theta + \lambda)$ for clockwise running, and that x is the valve displacement,

Digitized by Google

λ in each case being the angle by which the eccentric radius lags behind the main crank.

The relation between ϕ and λ for a given distribution is a simple one. If, for instance, it is found that the angular difference to effect a stated distribution of steam is ϕ degrees when the steam is taken on the outside of the valve, the angle λ for the corresponding inside distribution would be $(180 - \phi)$ degrees.

In each of the four figures the displacement x is found by projecting OK the eccentricity on to the line of stroke of the valve.

This projection should strictly be made by an arc equal in radius to the eccentric rod in the way explained in Art. 34. Commonly the eccentric rod is so long relatively to the eccentricity, that the error introduced by using a straight line instead of the arc is negligible, in which case the valve displacement from its central position is given by

$$x = r\cos(\theta \pm \phi) \text{ or } x = r\cos(\theta \mp \lambda).$$

43. Angular advance. Angular lag. Although the angle ϕ is strictly the angular advance of the eccentric in front of the main crank, the term is often used, in fact most generally used, to denote the excess of ϕ above 90 degrees. Thus

$$\phi = (90^\circ + \delta),$$

the symbol δ being used to denote the angular advance in this sense.

If a slide valve receives its motion from an eccentric gear in which the eccentric sheave is keyed at 90 degrees in front of the main crank, the line of stroke of the valve being assumed parallel with the line of stroke of the piston, the cycle of events determined by the valve is one in which compression and admission take place at the same instant, that is, there is no compression stage, and cut off and release take place at the same instant, that is, there is no expansion. The pairs of points 4 and 1 in Fig. 2 are coincident, points 2 and 3 also coincide, and the diagram takes the form of a rectangle.

In order to obtain a time interval for expansion to take place between cut off and release, outside lap must be given to the valve and the eccentric angle must be increased beyond the 90 degrees. A certain small increase in the angle is also necessary to give lead to the valve. These increases allow of a time interval between compression and admission, which time interval may be increased or diminished by increasing or diminishing the inside lap.

In general for all cases where the line of stroke of the valve is

Digitized by Google

parallel to the line of stroke of the piston the angular difference between the main crank and the eccentric sheave is given by

$$\phi = (90 + \delta),$$

δ being what is often called the angular advance.

In what follows the actual angle between the main crank and the eccentric sheave will be called the angular advance and little further mention will be made of δ. It is introduced here merely to explain that the term angular advance may in general bear two meanings. The context of any work will however make it clear which meaning is being attached to the term.

In the case where steam is admitted on the inside of the valve the angular difference, λ, between the crank and the eccentric radius may be called angular lag because the eccentric is always behind the crank whichever way rotation takes place.

44. To find the simultaneous displacements of the piston and valve corresponding with a given crank angle and a given value of the angular advance. Let the radius of the main crank be one foot, and the eccentricity three inches. Steam is to be taken outside the valve so that ϕ is to be set out in front of the crank.

Draw the crank circle, Fig. 36, and divide it into a number of equal parts. Twelve only are used in the figure to avoid complication. Draw the piston displacement curve by either of the methods of Arts. 32 to 35. The method of Art. 35 is used in the figure, and the rod is taken to be four times the length of the crank. Then set out ϕ, the angular advance, as shown. Draw the circle representing the path of the centre of the eccentric sheave with radius equal to the eccentricity, and *starting from* figure 0 on this circle, divide it into the same number of equal parts as the equidistant positions of the main crank divide the crank pin circle, and number these correspondingly with the numbers on the crank pin circle, being careful to number round in the same direction as on the crank pin circle. A pair of numbers on these two circles will fix corresponding positions of the crank pin and the centre of the eccentric. Assuming the ratio of the eccentricity to the length of the eccentric rod to be small, perpendiculars dropped from the successive positions of the eccentric sheave centre to the correspondingly numbered lines below, Fig. 36, will determine points on the valve displacement curve with sufficient accuracy. (If the eccentric rod is short relatively to the eccentricity, the exact construction of Art. 35 should be used.) Sketch in the curve through these points and the valve displacement curve is obtained in its proper relative position with regard to the piston displacement curve.

Digitized by Google

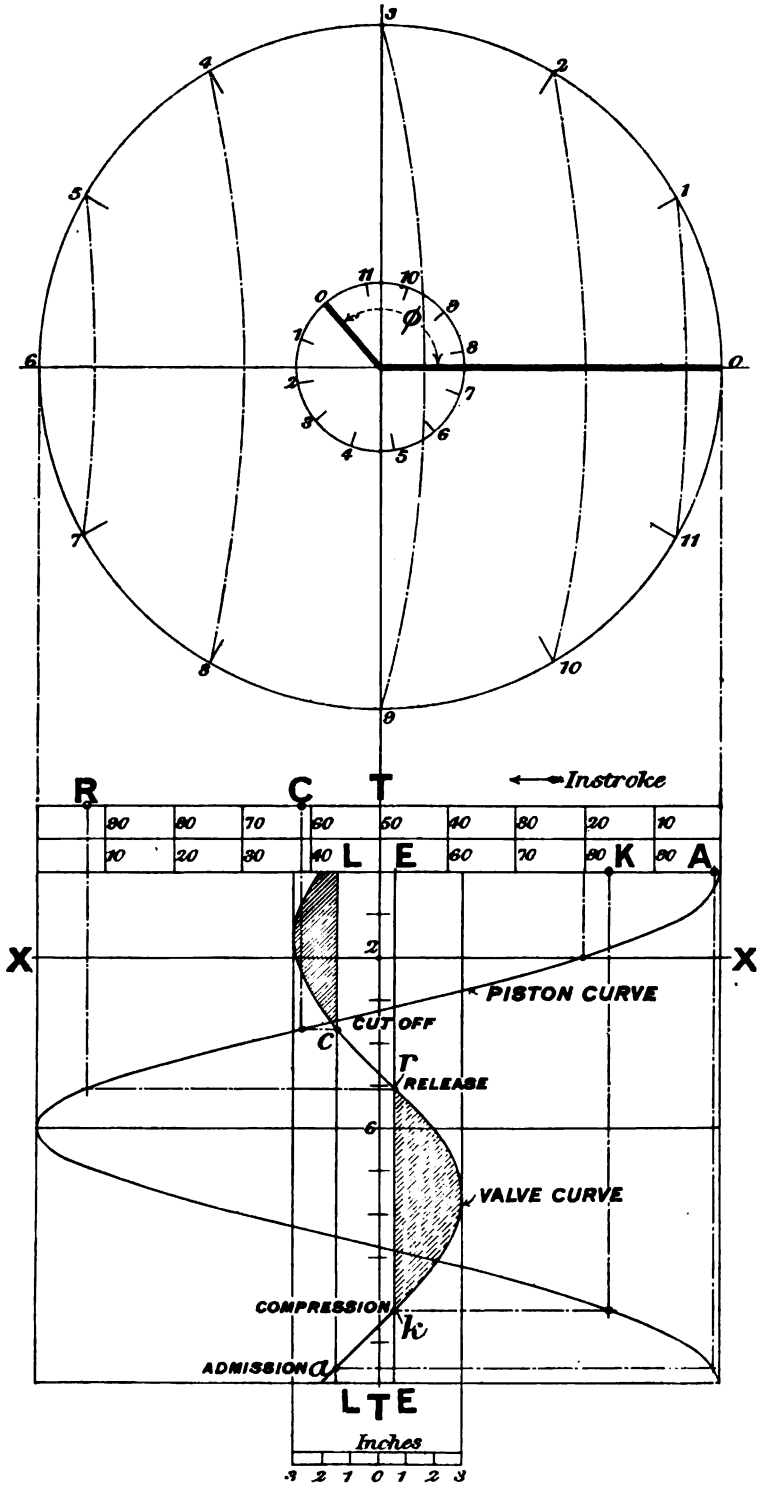

Fig. 36. THE VALVE DIAGRAM.

Digitized by Google

Any crank angle being assigned, the corresponding piston and valve displacements can at once be found from the diagram by merely drawing a horizontal XX through the given angle. The simultaneous positions of the piston and valve are then shown by the parts of this line intercepted between TT and the respective displacement curves.

Example. What are the respective positions of the piston and the valve when the crank angle is 60 degrees?

On the diagram, Fig. 36, 60 degrees corresponds with the position marked 2. Draw a horizontal XX through 2, and it will be seen that the piston is at 20 per cent. of its stroke, whilst the valve displacement from the central position is 2·95 inches to the left.

45. The valve diagram. The object of the valve diagram is to discover what is taking place with regard to the steam distribution, or to exhibit the relations between given data, and from them to obtain complete data so that the gear and the valve may be designed to effect a distribution of steam according to a stated cycle.

Referring to Art. 17 it will be seen that directly x, the displacement of the valve from its central position, is known, it is at once possible to determine what is taking place with regard to the steam distribution, assuming the steam and exhaust laps to be known.

The diagram, Fig. 36, links the valve position with the piston position so that the piston position corresponding with a stated value of x is shown. Hence, if the displacement x is found for the different events of the stroke, the corresponding piston position may at once be found by projecting horizontally on to the piston curve and then vertically on to the appropriate percentage scale. Now, for the different events, x is equal either to the steam or exhaust lap, so that it is only necessary to locate these positions to determine the complete distribution of steam. Considering the **instroke,** this is conveniently done by drawing the vertical line LL to the left and at a distance from TT equal to the outside lap. This line cuts the valve displacement curve at the two points c and a. These two points fix the positions at which the valve displacement is equal to the steam lap. Point a corresponds to admission of steam, since the displacement of the valve from its central position is increasing, and point c corresponds to cut off, since the valve displacement is decreasing. If XX be moved down so that it passes through c, it will cut the piston curve in a definite point, and projecting this point on to the upper percentage scale, the position, C, of the piston at cut off may be read off. Similarly A is the point on the percentage scale corresponding to a.

For the events of compression and release, draw the vertical line EE

Digitized by Google

to the right and at a distance equal to the exhaust lap from TT, cutting the valve displacement curve in the points r and k. At r the valve displacement is increasing, therefore it marks the release point; at k the valve displacement is decreasing, therefore it marks the compression point. These two points are projected first horizontally on to the piston curve as shown, and then vertically to the points K and R.

Again, since the opening for steam is given by

$$x - \text{steam lap},$$

the cross hatched area shows by its horizontal width the actual opening of the steam port for any crank angle between admission and cut off.

Similarly, since opening to exhaust is given by

$$x - \text{exhaust lap},$$

the horizontal width of the dotted cross hatched area shows the opening of the port for any crank angle during release and compression.

The **lead,** being the opening when the piston is on a dead point, is shown on the horizontal through 0 or 12.

The events of the **outstroke** cycle, beginning when θ is 180 degrees, are found in a similar way, the only difference being that the line LL must be drawn to the right of TT, and the line EE to the left, the distances in each case being respectively the steam and exhaust lap of the valve corresponding to the 180° cycle (that is the distribution from the front port), which distances may or may not be equal to the corresponding distances for the 0 degree or **instroke** cycle.

This particular form of diagram was, I think, first taught by Professor Reynolds. From the draughtsman's point of view it will be found the most generally useful, although it is not by any means the simplest or quickest to draw for the simple eccentric gear. It exhibits the relations between the different quantities, however, in a simple way, and keeps clearly in view the actual movement of the parts concerned.

46. Adjustment of scales. A very cursory consideration of the diagram, Fig. 36, will show that if the valve displacement curve is drawn full size, as it always should be, the corresponding piston displacement curve is unnecessarily large for the purpose for which it is required, namely, to read off the percentage position of the piston.

The scale of the ordinates of the piston curve may clearly be reduced to any convenient size, whilst the valve curve ordinates are kept full size. It is of course essential that the curves be drawn on the same base TT, otherwise the main object of the diagram is destroyed. If the curves were drawn on different bases, it would no longer be possible to read off a pair of simultaneous displacements on the line passing through a given angle at right angles to TT.

Digitized by Google

A valve diagram set out with suitable scales is given in the next article. It may be mentioned that the work is considerably reduced if the diagram is drawn on a sheet of squared paper, the scale for the piston curve being chosen so that the stroke corresponds with ten of the main divisions of the paper. The diagram is then subdivided vertically, by the lines of the squared paper, and the percentage position of the piston can be read off quickly and accurately.

Examination of the Distribution of Steam effected by the Simple Eccentric Gear.

47. Measurement of data. This is most conveniently explained in connection with the problem presented, as follows:—

> Given a double-acting engine, find at what percentage of the stroke the different events of the steam distribution take place; find the maximum port openings for steam and exhaust; and find the respective leads.

In the first place, data sufficient for setting out the valve diagram must be obtained from the engine. The data required are:—

(1) for the piston displacement curve, the ratio of the length of the connecting rod to the crank;

(2) for the valve displacement curve, the eccentricity of the sheave, and the angle between the sheave radius and the main crank, that is the angular advance or the angular lag;

(3) the steam and the exhaust laps, and the widths of the ports and the bridges.

Let it be assumed that all the measurements are to be made without taking the gear down.

The measurements required for (1) may be obtained most accurately in connection with the measurements for (2).

The first thing to decide is whether the slide valve is taking steam on the inside or outside of the valve. Stand facing the engine with the cylinder to the left. Turn the shaft round until the main crank is approximately in the zero position as shown in Fig. 36. Then notice the position of the eccentric. If the angle between it and the main crank is less than 90 degrees, the valve is taking steam on the inside, if greater than 90 degrees, on the outside. The direction in which the engine runs can at once be inferred by comparing the position of the eccentric sheave relatively to the crank, with Figs. 32 to 35.

The eccentric rod is usually so long in relation to the eccentricity

Digitized by Google

that the effect of its obliquity may be neglected without introducing sensible error, in which case the displacement of the valve from its central position is given, with negligible error, by

$$x = r \cos(\theta + \phi).$$

To find r, chalk the valve spindle in a convenient place near the stuffing box, and, whilst the engine is being turned round slowly, mark the valve spindle with a trammel of the kind illustrated in Fig. 10, finally fixing the extreme marks of the trammel point in either direction by a centre punch dot. The distance between these extreme dots is the valve travel, and half this distance is the eccentric radius.

The measurement of the angle* between the sheave and the crank can be made without taking the gear down by making use of the above expression for the displacement; for if x and the corresponding crank angle θ are known, since r has just been measured, ϕ can be calculated. The values of θ at which it is easiest to place the main crank are 0 and 180 degrees, corresponding to the dead points of the piston. The placing of the crank in either of these positions requires some care, because near the dead points the crank turns through a large angle for an extremely small motion of the piston, so that it is impossible to tell, by mere observation, when the crosshead comes to the end of its stroke, or when the crank is at 0° or 180°, with any degree of precision. The following method is commonly used in the process of valve setting, and it should be studied carefully.

To place the crank at 0° *or* 180°, *the positions corresponding with the dead points of the piston.*

Assume that it is to be placed at 0 degree. Turn the crank shaft round, Fig. 37, until the crosshead is within about one-eighth of the stroke from the dead point. Then put a centre dot, A, on the slide bar, and with a trammel of any convenient length scribe an arc on the slide block and put a centre dot at B, on the arc. Keeping the gear in this position, take a long trammel, and from a centre dot at C, put at any convenient position on the framing of the engine, scribe an arc on the face of the wheel or crank disc, to cut a circular arc drawn on the face of the wheel in D. Next turn the crank shaft round slowly until the crosshead, passing through its dead point, comes back to the position fixed by the trammel AB. Of course it requires at least two men to do this, one to turn, the other to watch the crosshead. Be careful not to overshoot the position, because the block must be stopped dead at the place by turning in the direction shown, in order to avoid error due to any slackness in the joints. Having brought the block to the correct position, mark the

* See Appendix.

Digitized by Google

rim of the wheel with the trammel *CD* from the centre *C*. The point *E* would thus be obtained. Now bisect the arc *ED* in the point *F*. Then holding the large trammel with one point at *C*, turn the shaft slowly until the other point drops into the dot *F*. The crank is then in the position 0 degree, corresponding to the dead point of the piston. In a similar way the crank may be put in its 180 degree position.

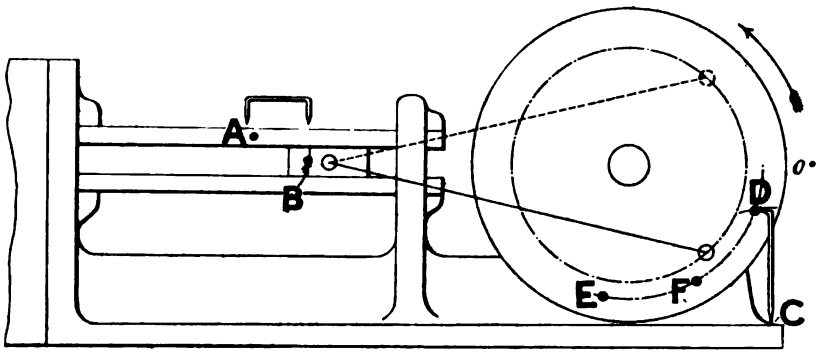

Fig. 37. Setting the Piston on a dead point.

Assuming the crank to be placed at 0 degree, carefully measure the distance of the valve from its central position by scribing the valve spindle with the trammel used to find the travel, and then measure this distance from a centre dot placed midway between the dots marking the limits of the valve travel. This quantity is the x of the above expression. The angular difference ϕ can now be calculated from

$$\cos\phi = \mp\frac{x}{r},$$

the $-$ sign being used if there is angular advance, and the $+$ sign if there is angular lag.

Thus in a particular case where there was angular advance, x measured 0·96 inch when the crank was placed in its zero position. The travel measured 3 inches, so that the eccentricity was 1·5 inches. Hence

$$\cos\phi = -\frac{0{\cdot}96}{1{\cdot}5} = 0{\cdot}642.$$

From the tables this is found to be the cosine of 50 degrees, but since the sign is minus it is $180 - 50 = 130$ degrees. The angular lag would have been 50 degrees if the valve had taken steam on the inside.

To measure the length of the connecting rod, place the engine successively on the two dead points and measure the distance from the centre of the crosshead pin to the centre of the crank shaft in each

Digitized by Google

position. Half the sum of these two distances is the length of the connecting rod. The length of the stroke can be easily measured at the slide bars.

3. The laps are to be measured from a drawing showing a section of the valve in its mid-position over the ports. To make this drawing:—

(1) Place the engine on its respective dead points by the method just explained and measure the respective port openings, that is the "leads." Measure also x_1 and x_2, the respective displacements of the valve corresponding to $\theta = 0$ degree and 180 degrees, in the way just explained.

(2) Take the valve out and measure the ports. This is conveniently done by taking a rubbing of them on a sheet of paper.

(3) Draw a sectional view of the ports and draw the edge of the slide valve in the position where it shows the "lead" when the crank is say at 0°. Measure the distance x_1 from this edge, obtaining thereby the positions of the edge when the valve is in its central position, and working from this edge draw as much of the valve in as is necessary for the purpose in view.

(4) Repeat for the 180° dead point as a check.

(5) From this drawing all the laps can be measured.

48. Drawing the valve diagram. Let the data be the following:

Ratio of crank to length of connecting rod, 1 to 5·5;
Eccentricity of sheave, 1·5 inches;
Angular advance, 130 degrees;
Steam lap, 0·8 inch for both cycles;
Exhaust lap, 0·28 inch for both cycles.

Assume that the eccentric rod is long enough for the effect of its obliquity to be neglected.

1. Draw the piston displacement curve by the method of Arts. 34 or 35, preferably on a sheet of squared paper selected so that ten of the main divisions are somewhat greater in length than the travel of the valve, that is 3 inches. For this particular example a sheet divided into square centimetres will be found convenient.

2. Draw the valve displacement curve by the method of Art. 44, or plot it from the equation

$$x = 1{\cdot}5 \cos(\theta + 130),$$

being careful to set out x to the right or left of the centre line TT according to the sign of the cosine.

Digitized by Google

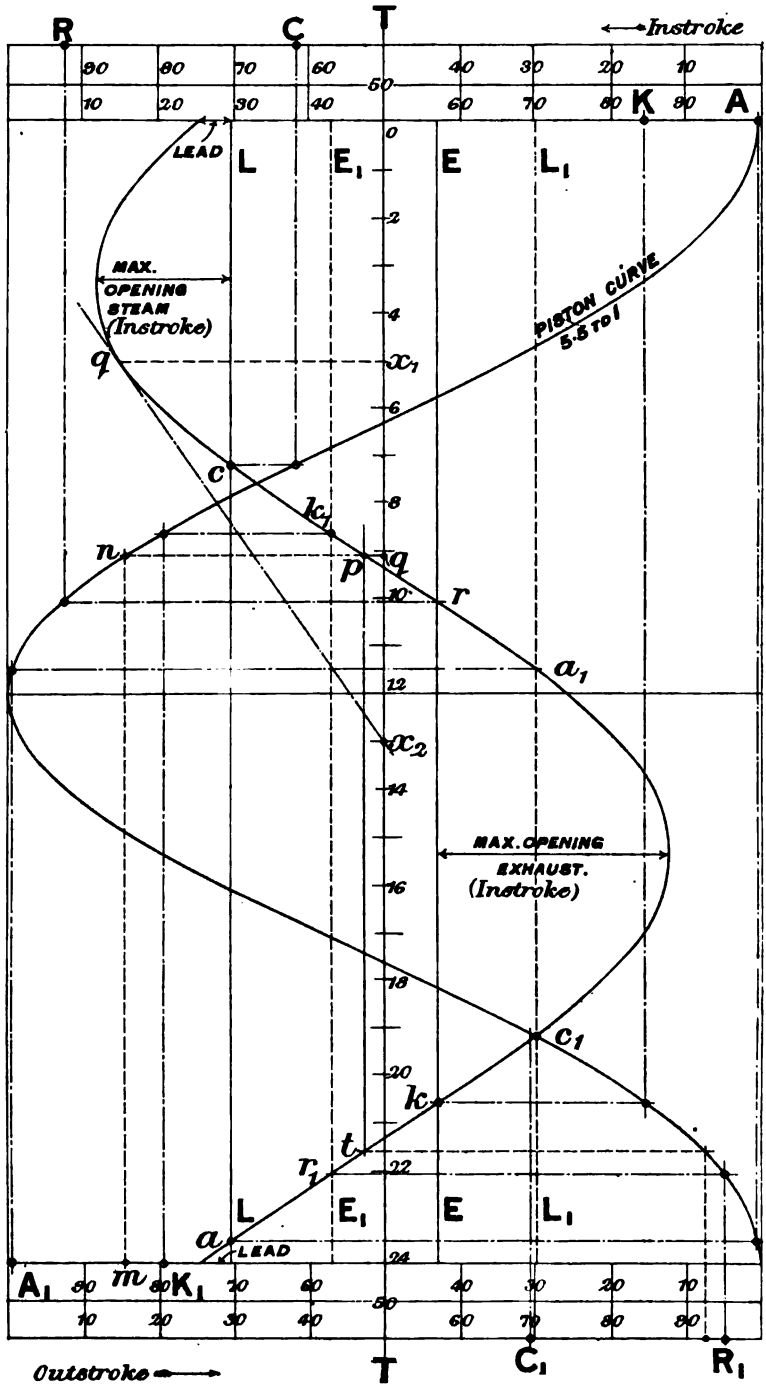

Fig. 38. Rectangular Valve Diagram.

Digitized by Google

3. Considering the **instroke cycle** beginning at 0 degree, draw the line LL at 0·8 inch to the left of TT cutting the valve displacement curve at a and c. Transfer these points horizontally to the piston curve and vertically to the percentage scale for the **instroke cycle,** obtaining

Admission, 99½ per cent. of the return stroke.
Cut off, 61 per cent. of the stroke.

Again, draw the vertical EE at 0·28 inch to the right of TT, cutting the valve displacement curve in the points r and k. Project these points horizontally to the piston curve and then vertically to the percentage scale for the **instroke cycle,** obtaining

Release, 92½ per cent. of stroke.
Compression, 84½ per cent. of the return stroke.

The lead measures 0·17 inch.

The maximum port opening for steam is $1·5 - 0·8 = 0·7$ inch, and occurs when the piston is at 16 per cent. of its stroke.

The maximum port opening for exhaust is $1·5 - 0·28 = 1·22$ inches and occurs when the piston is at 21 per cent. of its return stroke.

4. Consider now the **outstroke cycle** beginning at 180 degrees. Draw the line (dotted) L_1L_1 at 0·8 inch to the right of TT, cutting the valve displacement curve in the points a_1 and c_1. Project these points horizontally to the piston curve and then vertically downwards to the percentage scale for the **outstroke cycle,** obtaining

Admission, 99½ per cent. of return stroke.
Cut off, 69½ per cent. of stroke.

Again, draw the vertical E_1E_1 at 0·28 inch to the left of TT, cutting the valve displacement curve in the points r_1 and k_1. Project these points horizontally to the piston curve and then vertically downwards to the **outstroke cycle** percentage scale, obtaining

Release, 94½ per cent. of the stroke.
Compression, 79 per cent. of the return stroke.

The lead measures 0·17 inch, as before.

The maximum port opening for steam is 0·7 inch, as before, and occurs when the piston is at 21 per cent. of its stroke. The maximum port opening for exhaust is 1·22 inches, as before, and occurs when the piston is at 16 per cent. of its return stroke.

Finally, any position of the piston being assigned for either cycle, if the corresponding point be found on the appropriate percentage scale, and projected vertically on to the piston curve, and if through this second point a horizontal be drawn, as XX in Fig. 36, all the circum-

Digitized by Google

stances of distribution for both cycles can at once be obtained by considering the intercepts of the valve displacement curve along this line. The several events of cut off, release, compression and admission are indicated on the percentage scales by the capital letters

$$C,\ R,\ K,\ A,$$

a subscript dash being used to distinguish the events belonging to the outstroke cycles.

49. Velocity of the valve. The rate at which the valve is moving can be readily found from the displacement curve. At a point on the curve which is at a maximum distance from the axis TT, the valve is instantaneously at rest; it is in fact at a dead point. The more horizontal the curve becomes the greater the velocity.

An exact measure of the velocity can be found by measuring the slope of the curve and then multiplying this by a suitable factor, the factor depending upon the scales used in the valve diagram and the speed of rotation of the crank. Suppose, for instance, that the velocity of the valve at the point q on the curve is required, Fig. 38, corresponding to a crank angle of 75 degrees.

Draw a tangent to the curve at q and produce it to cut the vertical axis in x_2. Then the slope at the point q is measured by the ratio

$$\frac{qx_1}{x_1x_2}.$$

Measuring these distances off, it will be found that qx_1 is 1·35 inches, and x_1x_2, 2 inches. The slope is therefore

$$\frac{1{\cdot}35}{2} = 0{\cdot}675.$$

The multiplying factor to bring this to feet per second may be calculated in the following way:—

1 inch horizontally on the diagram represents p feet, say.
1 inch vertically on the diagram represents θ degrees.

The time taken by the crank to turn through θ degrees, if the crank makes n revolutions, that is $360n$ degrees, per second, is

$$\frac{\theta}{360n} \text{ seconds.}$$

Therefore one inch vertically on the diagram represents

$$\frac{\theta}{360n} \text{ seconds.}$$

The distance qx_1 represents $qx_1 \times p$ feet. And the distance x_1x_2

Digitized by Google

represents $x_1 x_2 \times \frac{\theta}{360n}$ seconds. The actual velocity represented by the ratio is therefore

$$\frac{qx_1}{x_1 x_2} \times \left(\frac{p \times 360n}{\theta}\right) \text{ feet per second.}$$

The quantity in brackets, which is the multiplying factor, therefore depends only on the scales chosen for the diagram and the speed of the engine.

In the present example

$p = \frac{1}{12}$ feet, since the movement of the valve is shown full size.

$\theta = 61$ degrees.

Therefore the numerical value of the multiplying factor is $0{\cdot}492n$.

The speed of the valve at q, that is when the crank is passing through the angle 75 degrees, is the slope, 0·675 multiplied by the factor $0{\cdot}492n$, and that is $0{\cdot}33n$.

If the engine crank is making 4 revolutions per second the actual instantaneous velocity is therefore 1·32 feet per second.

From this it will be seen that if the slopes of the displacement curve be tabulated against a series of corresponding crank angles, they will represent the varying velocities of the valve, and these slopes can be converted into actual instantaneous velocities by multiplying with the common factor whose complete numerical value is known when the speed of the engine is stated.

When the obliquity of the eccentric rod is neglected it is usually more convenient to calculate the velocity from the expression

$$v = -r \sin(\theta + \phi)\, 2\pi n,$$

which is found by differentiating the equation for the displacement x, with regard to the time. Working the above example in this way,

$$r = \tfrac{1}{8} \text{ feet and } \phi = 130 \text{ degrees.}$$

Therefore $$v = -\tfrac{1}{8} \sin(75 + 130)\, 2\pi n$$
$$= 0{\cdot}332n \text{ feet per second.}$$

This method is more accurate than the graphical way because the drawing of a tangent to a displacement curve cannot be done with great accuracy, though the accuracy is as a rule sufficient for all practical purposes. The graphical method has the advantage, however, that it is perfectly general and can be applied to find the velocity at points on any displacement curve, for instance, on the displacement curve shown in Fig. 52, which is distorted by the introduction of a rocker to make it pass through the two points required to give equal cut offs. It may also be applied to all the reversing motion displace-

Digitized by Google

ment curves given below. Before the analytical method can be applied the equation of the displacement curve must be known, and this cannot be found exactly for the cases just quoted, though, if the form of the curve is given, a Fourier Series may quickly be found to represent it. This matter is discussed below in Chapter X.

There are other geometrical constructions for finding the velocity of the valve in connection with the forms of valve diagram given in the next few articles, but they are based on the assumption that the valve is moving with simple harmonic motion and therefore give the same results as the above expression. Moreover when the solution is found it must be interpreted in connection with the scale of the drawing, so that altogether the work is no more expeditious than with the general method.

Many further illustrations of the analytical way of calculating v will be found in the sequel.

It may be mentioned that v will sometimes come out positive and sometimes negative, according to the value of θ. The positive sign denotes that the valve is moving from left to right, and the negative from right to left.

50. On the variation of the elements of the gear and the effect on the distribution of steam. This may be easily studied if the valve displacement curve is drawn on a piece of tracing paper, calling the angle zero when the displacement is a maximum in the positive direction, or in other words plotting the curve $x = r \cos \alpha$ to represent the motion of the valve.

Mark on the axis of the curve the angle ϕ, corresponding to the angular advance between the sheave and the main crank.

Set out the piston curve with its attendant percentage scales on a separate sheet of drawing paper. Then place the tracing of the valve curve over this drawing so that the vertical axis T_1T_1 on the tracing coincides with the vertical axis TT on the drawing of the piston curve. Keeping these lines in coincidence, move the tracing upwards until the angle ϕ is brought into coincidence with the angle zero on the axis of the piston curve. If there is angular lag, the angle λ must be set out in the negative direction on the tracing, that is upwards, starting from zero, and then the tracing must be moved downwards over the drawing to bring the angle λ on the tracing into coincidence with the zero of the piston axis. Having adjusted the tracing to this position pin it down and complete the diagram by adding the steam and exhaust lap lines to the tracing, obtaining thereby the diagram of Fig. 38, only with this difference. that the piston curve with its attendant percentage

Digitized by Google

scales is on a drawing beneath the tracing on which the valve displacement curve is drawn with its attendant steam and exhaust lap lines.

The effect on the distribution of changing the angular advance can be studied by moving the tracing up or down into new positions, this of course being equivalent to changing the angular advance. It will soon be discovered that although an increase of the angular advance, or a decrease in the angular lag, will give an earlier cut off point, yet every vertical movement of the tracing must be accompanied by an appropriate change in the steam lap if the lead is to be maintained at a constant amount. Also an increase of the angular advance will generally have to be accompanied by some change in the exhaust lap, otherwise the release will take place too soon and the compression may be excessive.

If, instead of changing the angular advance, the displacement curve be changed by varying r, the eccentricity (this involves sketching two or three cosine curves on the tracing on the same axis for different values of r), it will be found that a decrease in r determines an earlier cut off, but here again the lap must be altered if the lead is to be kept constant. Similarly the exhaust lap must be changed if the release and compression are to be kept at the same points.

In general the effect of changing the angular advance is much the same as the effect of changing the eccentricity. Neither change can be made without an appropriate change in the steam and exhaust laps, and both changes interfere with the maximum openings of the valve for steam and exhaust.

The student is recommended to reproduce the valve diagram of Fig. 38 in the manner here explained, that is with the valve displacement curve set out on a tracing, and to study the effect of the distribution of steam caused by changing

1. The steam lap;
2. The exhaust lap;
3. The angular advance, both an increase and decrease;
4. The eccentricity, both an increase and decrease.

In each case, study the effect of the change with all the other quantities constant. Then the effect of varying two together may be tried. An hour spent in this way will teach the student more about the properties of the kind of valve gear under consideration than ever he can hope to learn by reading about it.

In every case look carefully to the lead and assume that it must be kept constant.

Digitized by Google

There are many other ways of studying the question, but none which will give a clearer insight into what is taking place.

Four other valve diagrams will be explained in the next few articles. The differences in form all turn upon the different ways of setting out or obtaining the valve displacement.

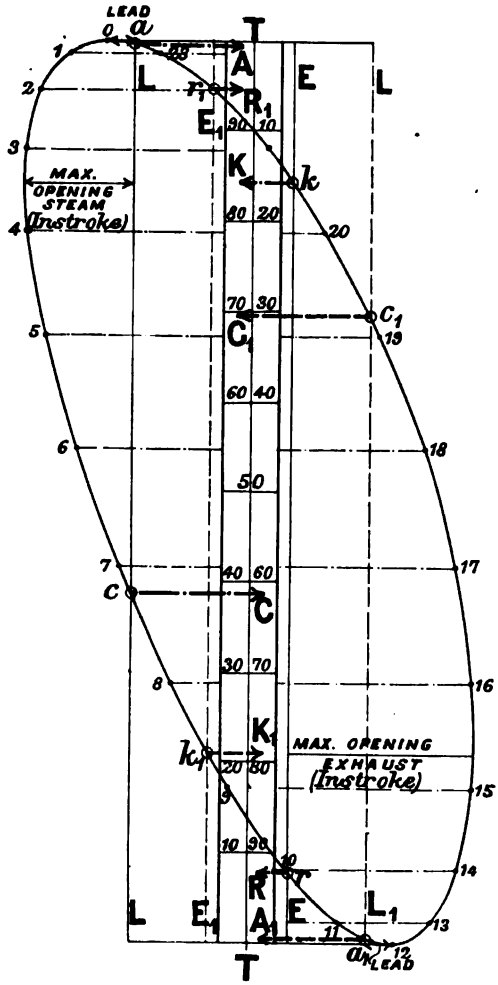

Fig. 39. Oval Diagram.

51. The oval diagram. A way of drawing a valve diagram, much used by locomotive engineers, is to plot the valve displacement on a stroke base. This is illustrated in Fig. 39. The vertical *TT* now represents the stroke, and the chain dotted horizontal lines pass through

Digitized by Google

the piston position corresponding to 24 equiangular positions of the crank. Any length may be chosen for TT, and then piston positions for a series of crank positions may be found by either of the methods explained in Arts. 34 or 35. The corresponding valve displacements are measured from Fig. 38 and are plotted at right angles to the stroke, giving the points 1, 2, etc. to 24. Joining these, there results an oval curve which tends to become an ellipse as the ratio of the connecting rod to the crank is increased, until in the limit when both the connecting rod and the eccentric rod are infinitely long the curve is an ellipse. This oval is the valve displacement curve on a piston base. To turn it into a valve diagram, draw LL, EE—L_1L_1, E_1E_1 representing the respective steam and exhaust laps, exactly as in Fig. 38, cutting the oval in the points

$$a, c, k_{,}, r, a_{,}, c_{,}, k, r_{,}$$

taken in order. The undashed letters refer to the **instroke cycle,** the dashed to the outstroke cycle. Projecting these points horizontally to the percentage scale drawn about the vertical axis TT, the piston position is obtained for the different events in the two cycles. As will be readily seen the opening for steam and exhaust can be measured off the diagram for any assigned piston position. The lead, being the opening when the piston is on a dead point, can be measured off for each cycle at the ends of the stroke.

The diagram is drawn for the data of Art. 48. This form of valve diagram is a convenient one when the valve displacement is obtained from a model of the kind where the simultaneous values of the piston position and the valve displacement can be read off.

52. The Zeuner diagram. This celebrated and much used diagram is the polar form of the rectangular diagram. If the valve displacement, x, is plotted radially from the centre along the arm of the main crank for a succession of angular positions, as shown in Fig. 40, and a curve be drawn through these points, the valve displacement curve takes the form of a figure 8.

The convenience of this form of displacement curve lies in the fact that if the length of the eccentric rod is a large multiple of the eccentricity, the curve does not differ sensibly from two circles, touching at the centre O. Moreover the line AB passing through O, the point of contact, at right angles to the common tangent at O, is inclined to the horizontal representing the line of stroke at an angle of $(180 - \phi)$ degrees, measured in advance of the crank, so that knowing ϕ, the line AB, and consequently the displacement circles, can easily be set out. Of course the line AB may equally well be set out by measuring ϕ in a direction opposite to

Digitized by Google

the motion of the crank, from the 180 degree position of the crank; or if

$$\phi = (90 + \delta)$$

by setting out the angle δ *to the right of* the vertical through O.

The rule for drawing the polar displacement circles may be stated thus:—

1. Set out the line AB at an angle $(180 - \phi)$ with the zero crank position, in the direction of rotation of the crank.

2. Set out OA, OB respectively equal to the eccentricity r, and on OA and OB as diameters draw circles touching at O.

AB represents the travel of the valve since it is twice the eccentricity.

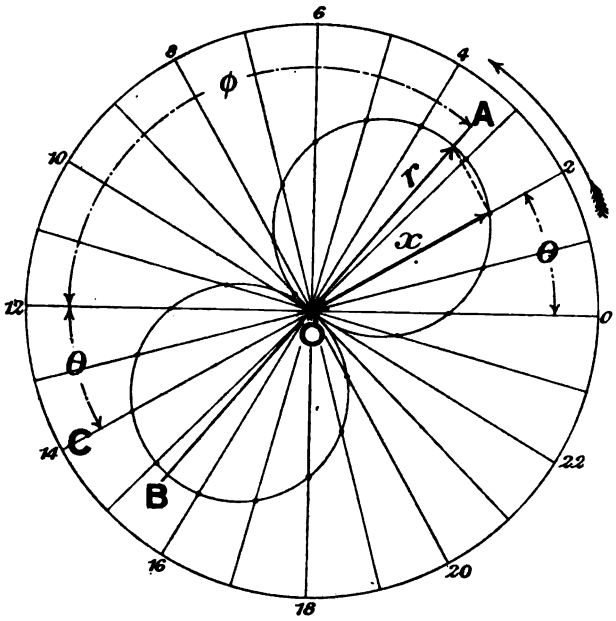

Fig. 40. Polar Valve Displacement Curve.

These two circles together form the polar valve displacement curve and have the property, that if the crank be placed in any position as 2, the intercept between the centre O and the curve, as x, is the corresponding displacement of the valve from its central position.

This may be proved as follows:—

When the effect of the obliquity of the eccentric rod is neglected, the displacement of the valve is given by

$$x = r \cos(\theta + \phi)$$

for the usual case of outside steam admission.

Digitized by Google

Produce the direction of the crank arm through the centre O, when it will be seen that the angle $(\theta + \phi)$ is equal to the angle AOC. The cosine of this angle is $\frac{x}{r}$, since the angle in the semicircle is always a right angle, so that $x = r\cos(\theta + \phi)$. This is true for all positions of the crank, the upper circle cutting off x for all positions of the crank above the common tangent at O, the lower circle serving to cut off x for all positions below the common tangent.

The position of the crank for the various events can be found by fixing the points on the circles where x is equal to the respective steam and exhaust laps. This is most conveniently done by drawing arcs from the centre O, with radii equal to the steam and exhaust laps respectively, Fig. 41, cutting the circles in the points

$$a, c, k_{,}, r, a_{,}, c_{,}, k, r_{,}.$$

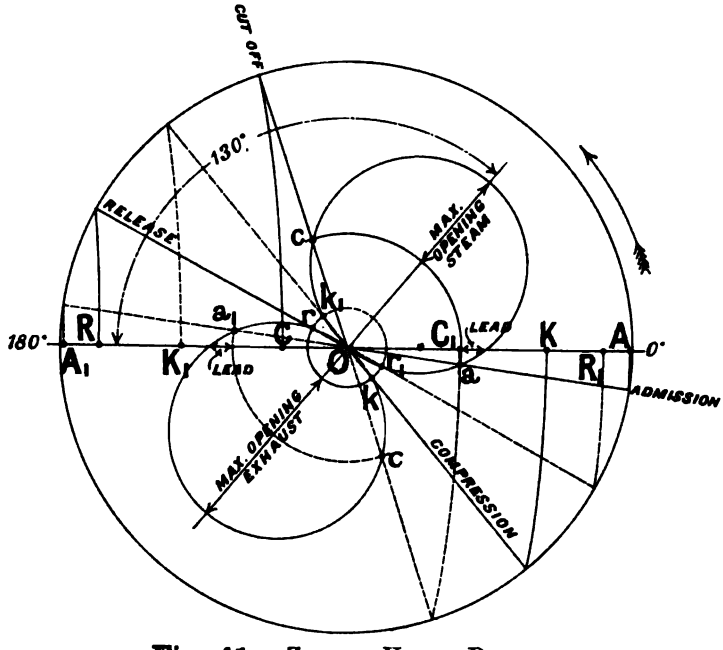

Fig. 41. ZEUNER VALVE DIAGRAM.

The several radii drawn from O through these points fix the angular positions of the crank corresponding to the eight events of the two cycles. Consider, for instance, the position of the crank Oc; the displacement x is given by Oc. But this is equal to the steam lap, and the displacement is decreasing, therefore cut off is just taking place. Hence Oc is the crank position for "cut off."

Digitized by Google

The port opening for steam on the instroke cycle is the intercept on the crank arm between the displacement curve and the arc *ac*. The port opening for exhaust is the intercept on the crank arm between the displacement circle and the arc *rk*. The outstroke cycle can be similarly treated. The leads for the two cycles are the respective intercepts when the crank is in the 0 degree and the 180 degree positions.

The corresponding piston positions are projected from the crank pin positions, by the curved arcs shown in dotted lines, on to the diameter of the crank pin circle which is taken to represent the stroke.

The ease with which this diagram can be constructed has led to its extensive use. It must not be overlooked that the displacement curves are only circles when the obliquity of the eccentric rod is neglected. If this is great and requires to be taken into account, the curves then take as long to draw as in the rectangular form of the diagram, since they must be set out by actually finding values of x corresponding to a series of crank angles, and then plotting these several values along the crank arm in its various angular positions instead of plotting them on a crank base.

Fig. 41 is drawn with the data of Art. 48.

53. The Reuleaux diagram. In the explanation of this and the following diagram it is more convenient to use the sine form for the valve displacement. Thus, since $\phi = 90 + \delta$,

$$x = r\cos(\theta + \delta + 90) = -r\sin(\theta + \delta).$$

The peculiarity of the Reuleaux diagram, Fig. 42, is that the angle δ is set out below the zero position of the crank, so that when the crank is in any position OQ, the angle QOD is equal to $(\theta + \delta)$. The perpendicular QS, from Q on to OD, the radius of the circle OQ being equal to r the eccentricity, is therefore equal to

$$r\sin(\theta + \delta).$$

The positions of the crank can be found for the various events of the stroke by finding those positions at which the perpendicular is equal to the respective laps. This is most conveniently done by drawing Q_1Q_2 parallel to OD at a distance from it equal to the steam lap, and Q_3Q_4 at a distance on the other side equal to the exhaust lap. These lines cut the circle in the points Q_1, Q_2, Q_3, Q_4, and these points fix the crank positions for the corresponding events, admission, cut off, release and compression. The positions for the instroke cycle only are shown. If the circle be taken to represent the path of the crank pin to scale, Q_1, Q_2, Q_3, Q_4, represent the positions of the crank pin. Considering the crank position Q_2, for instance, $Q_2P_2 = r\sin(\theta + \delta)$, is equal to the

Digitized by Google

displacement for that crank position, but this distance is equal to the steam lap, and the displacement is decreasing; therefore cut off is just taking place.

The opening for steam or exhaust for an assigned crank pin position is equal to the length of the perpendicular from the crank pin on to OD minus the appropriate lap. Hence the lead is found at once by dropping a perpendicular on to OD from the zero position of the crank pin and measuring the distance between the line Q_1Q_2 and the crank pin.

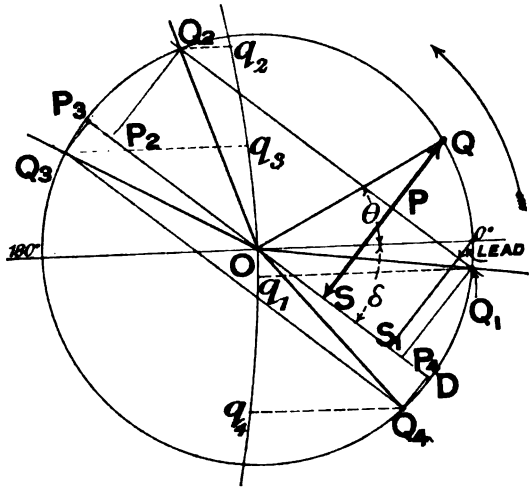

Fig. 42. Reuleaux Diagram.

The corresponding positions of the piston with reference to the centre of the stroke are exhibited by the horizontal distances, Q_1q_1, Q_2q_2, Q_3q_3, Q_4q_4, between the crank pin positions and the arc drawn through the centre O with radius equal to the length of the connecting rod. See Art. 37. Or, of course, they may be projected on to the diameter of the circle, by arcs, as in the previous case.

The diagram is drawn for the data of Art. 48.

54. The Bilgram diagram. This is a diagram of the same type as the previous one, only here the angle δ, Fig. 43, is set up from the 180 degree position of the crank in a direction opposite to the direction of rotation of the crank. A circle is drawn from O, with radius equal to the eccentricity, thereby fixing a point Q. Suppose the crank to be placed in any position defined by the angle θ. Produce the crank through O, and it will be seen that the angle this direction makes with the line OQ is equal to $(\theta + \delta)$. Hence, a perpendicular QS from the fixed point Q on to the crank is equal to $r \sin(\theta + \delta)$, and it therefore

Digitized by Google

represents the valve displacement. In the crank position θ_2 the crank is at right angles to QO; QO is therefore the valve displacement. Between the angles θ_2 and $\theta_2 + 180$ degrees, the foot of the perpendicular falls on the crank arm itself, as shown for the angle θ_1.

If circles be drawn from the centre Q with radii respectively equal to the steam and exhaust laps, the crank positions for the four events of the instroke cycle are fixed by the four tangents which can be drawn to these circles from the point O. Consider the event of "cut off," for instance. The valve displacement is given by Qs_2 and this is clearly equal to the steam lap, therefore the crank is in the position corresponding to cut off by the valve.

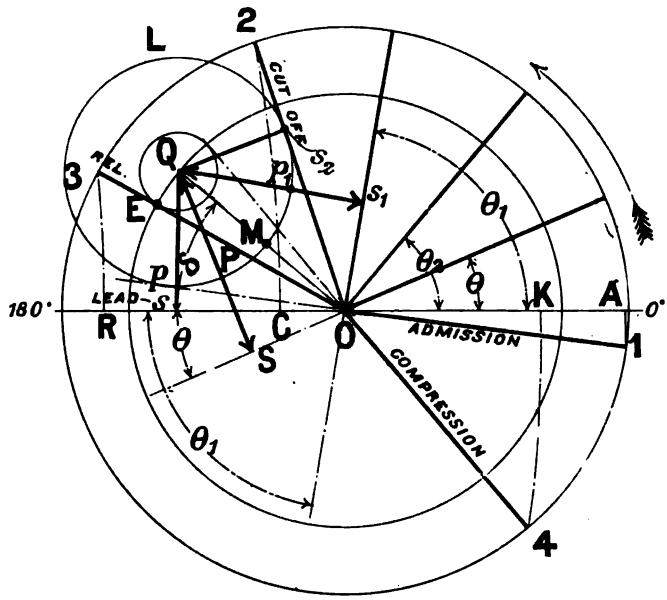

Fig. 43. BILGRAM DIAGRAM.

In the position θ_1, Qs_1 is the displacement of the valve, and Qp_1 is the steam lap; therefore the difference p_1s_1 is the opening for steam. When the crank is at zero, Qs is the displacement, and Qp is the steam lap; therefore ps is the lead.

No difficulty will be found in following the crank positions from the figure which is drawn for the instroke cycle with the data of Art. 48.

The piston positions A, C, R and K, are projected from the crank pin positions 1, 2, 3 and 4, by the arcs shown.

Digitized by Google

DESIGN OF THE GEAR TO FULFIL GIVEN CONDITIONS.

55. Determination of the displacement curve to pass through two given points. A study of the valve diagram, Fig. 36, will show that, for a given gear, the valve displacement curve can be drawn when the two constant quantities r and ϕ are known.

It is a mathematical principle that a curve involving two constants for its specification may be made to pass through two given points. In this case the constants r and ϕ are connected by the relation

$$x = r \cos(\theta + \phi) \qquad (1),$$

from which x, the variable displacement, can be calculated when the value of the other variable θ is assigned. Hence, following the principle stated above, the displacement curve may be made to pass through any two points P and Q, Fig. 44, taken within the limits $\theta = 0$ and 360 degrees, by suitably fixing the values of r and ϕ.

Each of the two points P and Q requires two quantities to specify it, namely, the angle θ and the displacement x: so that, in general, valve gear problems in which the motion of the valve is not sensibly affected by the obliquity of the eccentric rod involve, primarily, the consideration of six quantities, of which four must be given and the remaining two are to be found.

Let two points P and Q be given, P being specified by the angle θ_1 and the displacement x_1, Q being specified by the angle θ_2 and the displacement x_2. The angles are measured as abscissae from the point O. The most convenient way to find r and ϕ is to substitute the given values of x and θ in equation (1), getting thereby two simultaneous equations in r and ϕ. The solution of these equations will give the values of r and ϕ required. A geometrical solution may however be given here. Consider Fig. 44, which, assuming the solution, shows the eccentric radius in the positions DA and DB, corresponding with the crank angles θ_1 and θ_2. The key to the solution lies in the circumstances that, if AB is joined, ABD is an isosceles triangle whose vertical angle is $(\theta_2 - \theta_1)$ and that the base AB is divided in C, so that

$$AC : CB = x_1 : x_2,$$

and that the initial line DV_0 from which the crank angles are measured is at right angles to DC. The geometrical problem is therefore to draw this isosceles triangle having given the vertical angle and the ratio of the segments of the base. The construction is as follows:—

Draw, Fig. 45, any isosceles triangle ABD, having a vertical angle $\theta_2 - \theta_1$. If $\theta_2 - \theta_1$ is greater than 180 degrees make the angle $360 - (\theta_2 - \theta_1)$.

Digitized by Google

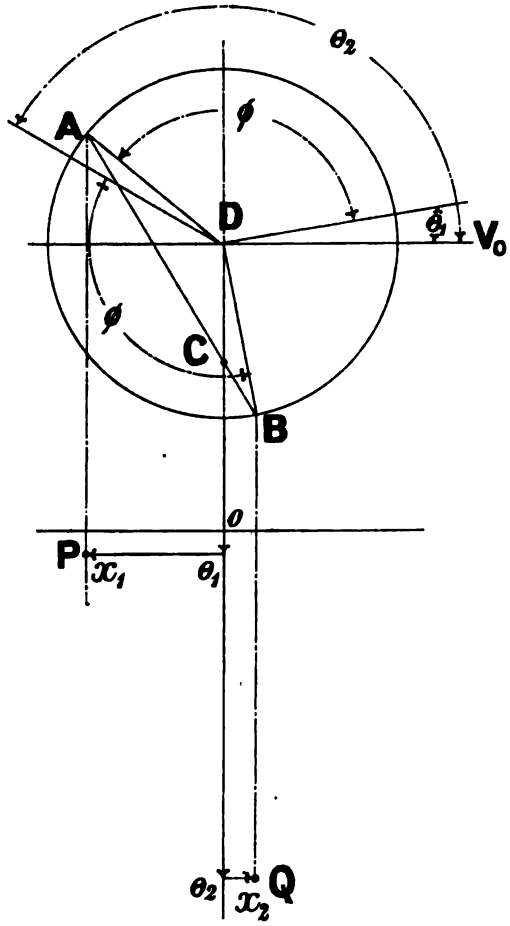

Fig. 44.

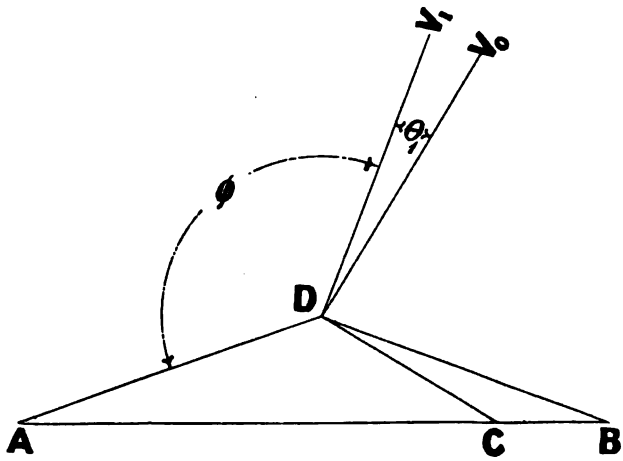

Fig. 45.

Digitized by Google

Divide the base at C in the ratio of the given displacements x_1 and x_2. If x_1, x_2 are of unlike sign, divide AB interiorly: if of like sign, divide AB exteriorly.

Join DC, and from the apex D draw a line DV_0 at right angles to DC.

Then DA is the eccentric radius to the scale on which CA represents the displacement x_1.

From DV_0 set out the angle θ_1. Then V_1DA is the angular advance ϕ.

If P and Q are plotted on a polar diagram, as in Fig. 40, the problem resolves itself into the drawing of a circle through three given points, namely the points P and Q and the centre O.

56. The determination of the displacement curve to pass through one given point. If either r or ϕ is given, the displacement curve can only be made to pass through one point. The construction is then, assuming r to be given:—

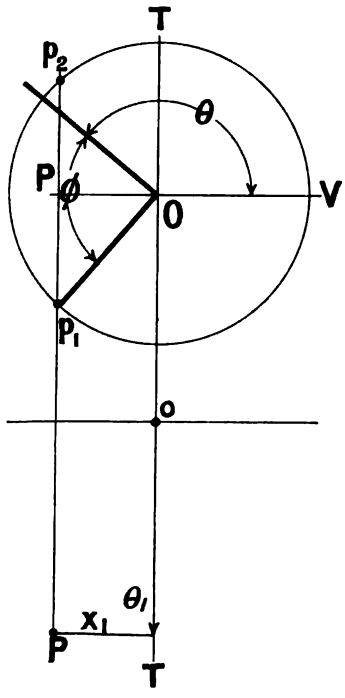

Fig. 46.

Draw a circle with the given radius, Fig. 46.

Let θ_1, x_1 define the given point P.

Draw a line through P, parallel to TT, to cut the circle in points p_1 and p_2. The two points of intersection show that two solutions are possible. Which of the two is that required is to be determined from the conditions of the problem. Let p_1 be taken in this case. Join p_1 to O. From OV set out θ_1 the given angle. Then ϕ is the required angular advance.

If ϕ is given and r is to be found, set out the angle $\theta_1 + \phi$ from the initial line OV. Set out OP equal to the given value of x_1, and then a perpendicular to OV, through P, will intersect the line Op_1 in p_1, fixing thereby the radius Op_1.

Digitized by Google

57. Quantities which determine points on the displacement curve. In valve gear problems, the giving of the angle of the crank at which a definite event of the distribution takes place fixes one of the quantities necessary to define a point through which the displacement curve must pass: the nature of the event determines the displacement corresponding to this angle. Thus if

θ_c is the crank angle at cut off, the displacement is equal to the steam lap.

θ_r is the crank angle at release, the displacement is equal to the exhaust lap.

θ_a is the crank angle at admission, the displacement is equal to the steam lap.

θ_k is the crank angle at compression, the displacement is equal to the exhaust lap.

θ_o is the crank angle at a dead point, which is either 0 or 180 degrees, the displacement is equal to the lap plus the lead.

Hence if any two of the above pairs of values be given, the construction of Art. 55 may be applied to find the constants of the displacement curve which will pass through the points defined by the given data.

If the data given are equivalent to the fixing of three points on the displacement curve, the problem is impossible with the form of displacement curve under discussion. If one point only is specified, the solution is indefinite in the sense that the number of solutions is infinite. In this case one of the constants may be chosen, either r or ϕ, and the problem then becomes the definite one of Art. 56.

58. Design problems. Since six quantities are primarily concerned with valve problems, it will be obvious that a large number of exercises may be manufactured in which four of the six are given and the remaining two have to be found. In many cases the value of the displacement corresponding to given angles has to be found from known relations existing between the displacements themselves. The problems presented in practice, in connection with the design of a valve gear, are however restricted to a few, and in solving them geometrically it is well to keep in mind the relations existing between the various constants of the gear and illustrated in Fig. 47. Thus, if OV represents the crank at a dead point, and Oq the eccentric radius, the projection of the radius, namely Oq_1, is equal to the valve displacement from its central position, and this is equal to the steam lap plus the lead. Further if Oa represents the position of the eccentric radius at admission, the projection, OL, represents the

Digitized by Google

displacement of the valve at admission, which is of course the steam lap; moreover, if the projector be produced to cut the circle at *c*, *Oc* is the position of the eccentric radius at cut off. Similarly *Ok*, *Or* are the respective positions of the eccentric radius at compression and release,

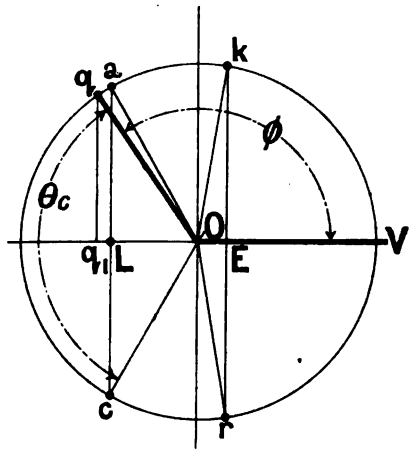

Fig. 47.

OE being the exhaust lap. The lines *ac* and *kr* are parallel, and both are bisected at right angles by the line, *VO* produced, which marks the zero position of the crank. Two problems are of particular interest, one of which may be stated as follows:—

Problem 1. Given the crank angle at cut off θ_c, the lead, and the eccentric radius; find the steam lap and the angular advance.

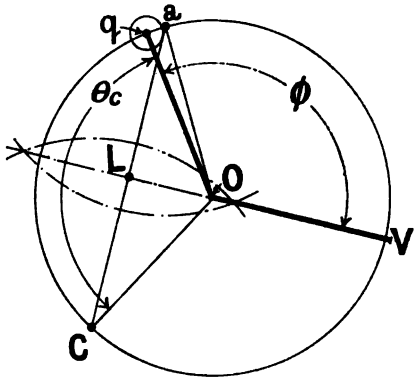

Fig. 48.

The solution of this depends upon the facts that the angle turned through by the eccentric radius from the position corresponding to the

Digitized by Google

zero position of the crank up to cut off is equal to θ_c; that the position of the crank at zero, produced, bisects the angle between the eccentric radius at admission and at cut off; and that the projection of the eccentric radius on the zero position of the crank, produced, is equal to the steam lap. Hence the following construction, Fig. 48:—

Draw a circle with the given radius r, and set out two radii Oq, OC, to contain the angle θ_c. With radius equal to the lead, draw a circle from q as centre; and from O draw a tangent to it, cutting the eccentric circle in a. Bisect aC in L and draw LOV. OV is the zero position of the crank; VOq is the angular advance; and OL is the steam lap.

From these, and the given data, the valve displacement curve may be set out and the various events of the stroke determined. The displacement curve being now fixed, the exhaust lap may be arranged to determine either release or compression at a stated per cent. of the stroke.

The second problem is in particular called the design problem.

Problem 2. Given the crank angle at cut off θ_c, the lead, and the maximum opening of the port for steam; find the eccentric radius, the angular advance and the steam lap.

It will be noticed that the data specify no point on the curve in particular. Two angles, namely θ_o and θ_c, are known, and the displacements corresponding to them have to be found from known relations existing between the displacements at cut off, maximum opening, and at the dead point. The geometrical problem here is: given three parallel lines of indefinite length, as QP, qq_1, aC, Fig. 49, to draw a circle touching one, of such a radius that the extremities of a chord in it, subtending an angle θ_c at the centre, rest respectively on the remaining two of the three parallels.

Construction, Fig. 49:—

Draw a circle of any radius, and set out two radii Oq, OC, to contain the angle θ_c. Produce the chord Cq to Q, taking Q so that if Cq represents the lead, qQ represents the maximum opening. In the figure the maximum opening is taken equal to twice the lead only, in order to bring the point Q within the limits of the page. Ordinarily it would be from 8 to 10 times the lead. From Q, draw QP tangent to the circle, and join P to the centre O and produce it to V. OV is the zero position of the crank, and the angle VOq is the angular advance.

Digitized by Google

Through the points q and C respectively, draw lines parallel to PQ cutting OP in L and q_1. Then OP represents the eccentricity, LP the maximum opening, and OL the steam lap, the scale being fixed by the given value of the maximum opening LP.

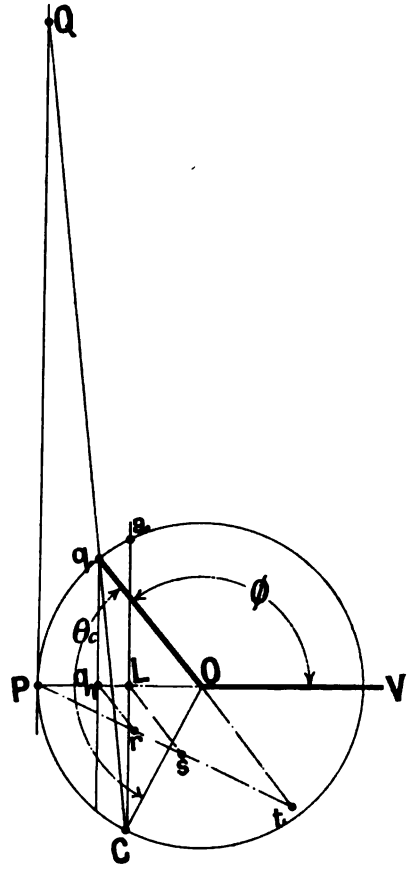

Fig. 49.

Hence if Pt be drawn at any angle to PV, and Ps be set out equal to the given maximum opening, the parallels to q_1r, namely Ls and Ot, cut off a length ts giving the lap required, and the length Pt giving the eccentric radius required. The given lead is equal to rs.

The disadvantage of this construction is that, when the maximum opening is a large multiple of the lead, the point Q falls at an inconveniently great distance from q.

The Bilgram diagram, Art. 54, may be used to solve this problem, and though not strictly a geometrical solution, it is a very good practical one.

Digitized by Google

The problem consists in the drawing of the Bilgram diagram, Fig. 43, having given the lead *ps*; the crank angle at cut off; and the maximum opening *OM*. The construction is as follows, Fig. 50:—

Set out the position of the crank at cut off, *OC*; draw a circle with radius *OM* equal to the given maximum opening, and draw *qq* parallel to OV_1 at a distance from it equal to the lead. Find by

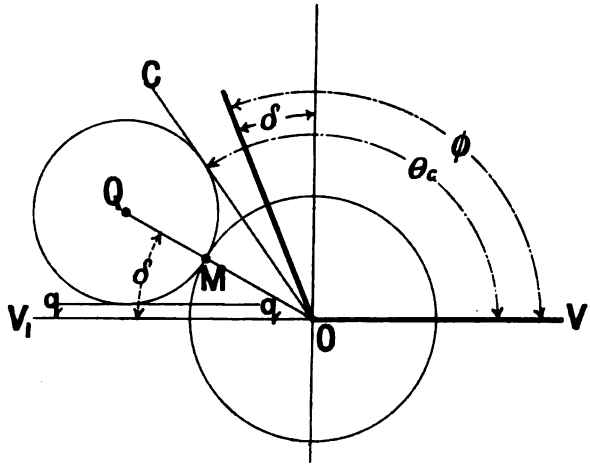

Fig. 50.

trial the centre *Q* of a circle which will touch *OC*, *qq*, and the circle *OM*. Then *QM* is the steam lap. The angle $QOV_1 = \delta = \phi - 90$ degrees, and *OQ* is equal to the eccentric radius.

A way of solving this problem analytically is given in Art. 75.

59. Adjustment of the inequalities of distribution by means of unequal laps on the slide valve. Comparing the results obtained for the two cycles in Art. 48, it will be seen that, owing to the shape of the piston displacement curve, the corresponding events of distribution take place at different percentages of the stroke in the two cycles. It will readily be seen, or can easily be tested, that if the piston curve were a true cosine curve corresponding to an infinitely long connecting rod, this inequality in the two cycles would not exist. In practice it is not possible to use connecting rods long enough in relation to their cranks to make the difference between the true piston displacement curve and a cosine curve negligible, so that this inequality must always be reckoned with.

It will be apparent from the valve diagram, Fig. 38, that if the steam lap line *LL* be moved slightly to the right or left of its position,

Digitized by Google

the cut off it determines can be varied a few per cent. of the stroke, but that this cannot be done without at the same time changing the percentage of admission, and, what is more important, the lead. Similarly a movement of the exhaust lap line *EE* will cause a change of the compression by a few per cent., changing the release point, however, at the same time. By making the exhaust laps, therefore, unequal, it is possible to adjust the event of compression to equality in the two cycles. Also the events of cut off in the two cycles may be brought towards equality by making the steam laps unequal, but inasmuch as a difference of steam laps means a corresponding difference in the leads of the two cycles the difference between the steam laps cannot be made very great.

Applying this method to the valve diagram, Fig. 38, for the adjustment of the compression of the outstroke cycle to equality with the compression of the instroke cycle, take the point *m* at 84½ on the appropriate percentage scale; project this vertically on to the piston curve at *n*, and project *n* horizontally on to the valve displacement curve obtaining the point *p*. The distance *pq* is the required exhaust lap, since it represents the displacement of the valve from its central position when compression is to take place. This measures 0·1 inch. To find what change has taken place in the release in consequence of this adjustment, draw the vertical *pt* cutting the valve curve in *t*. Projecting *t* horizontally on to the piston curve and then vertically on to the appropriate percentage scale, it will be found that the release has been changed from 94½ per cent. of the stroke to about 92½ per cent.

Obviously the release points could have been adjusted to equality in the same way at the expense of the compression.

It will be found from the diagram that if an attempt is made to bring the "cut offs" to equality at 61 per cent. in the same way, the lap must be changed to 1 inch approximately, obliterating all the lead of the outstroke cycle. All that can be done therefore is to make the difference in the cut offs less pronounced by introducing as much inequality in the steam laps as the leads will allow.

60. On the adjustment of the inequalities of distribution by means of a rocking lever. Pairs of corresponding events, namely "admission" and "cut off," or release and compression, and in a particular case all the four events, may be made to occur at equal fractions of the stroke in both cycles by the introduction of a rocking lever in the manner shown in Fig. 51. The effect of the rocking lever is to distort the valve displacement curve slightly so that its ordinates have the proper lengths to determine the events at equal fractions of the stroke

Digitized by Google

without introducing an inequality in the laps. The distortion of the curve is very little in the neighbourhood of the dead points of the stroke so that the leads of the two cycles are not sensibly different.

The method of designing the rocking lever to effect the necessary distortion of the displacement curve is tentative. The gear is first to be designed in the usual way to give a stated distribution of steam in one cycle. Then the design of the rocking lever to adjust the events of the other cycle, say "admission" and "cut off," to the stated fractions of the stroke depends upon the fact that "admission" and "cut off" occur when the valve is at the same distance from its central position. Hence so far as the position of the valve is concerned, without having regard to its direction of motion, the valve spindle cross-head is in exactly the same position relative to the fixed framework of the engine at the instants when either of these events occurs. (See Fig. 10.) But the eccentric sheave occupies different angular positions in the two cases. In the one case the rotation of the crank shaft tends to increase the displacement of the valve, in the other it tends to decrease it. The first step in the design is to plot the eccentric sheave centres p_1 and p_2, Fig. 51, in the positions corresponding to admission and cut off for, say, the instroke cycle, and using these points as centres,

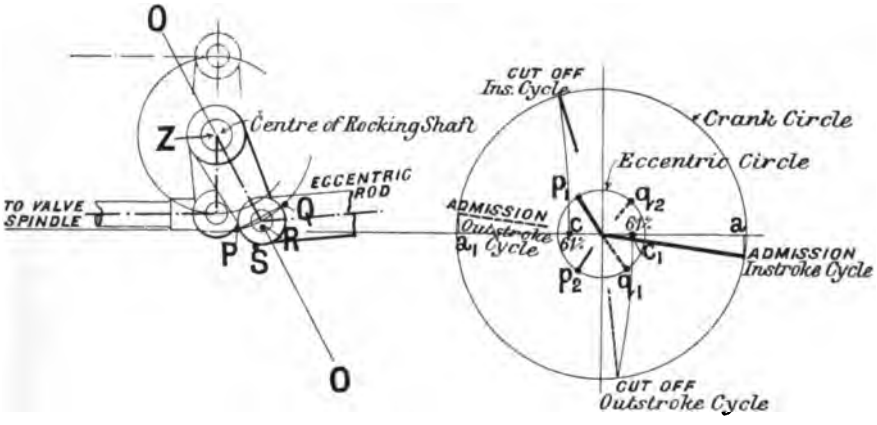

Fig. 51. Rocking Lever to equalise cut off and admission.

fix the corresponding position P of the end of the eccentric rod by the intersection of two arcs, each drawn with a radius equal to the length of the eccentric rod. Do the same for the other cycle, fixing the position Q of the end of the eccentric rod. If a rocker is introduced, so situated and proportioned that, whilst the arm coupled to the eccentric rod stands midway between the positions P and Q, the arm coupled to the valve rod is at right angles to the line of stroke of the valve, the adjustment is

Digitized by Google

accomplished, providing that the travel of the valve, as determined by the ratio of the lengths of the arms of the rocker, is consistent with the steam lap. That is to say, when the arm coupled to the valve rod is in either of the positions corresponding to P and Q, the valve must have a displacement to one or other side of its central position equal to the steam lap.

To illustrate this, take the data of Art. 48 and equalise the admission and cut off for both cycles. The data determine the following distribution of steam for the instroke cycle:—

Admission	99½	per cent.	of the	stroke.
Cut off	61	,,	,,	,,
Release	92½	,,	,,	,,
Compression	84½	,,	,,	,,

The problem is to design a rocking lever which will distort the valve displacement curve so that admission and cut off take place at 99½ and 61 per cent. respectively in each cycle, keeping the steam laps for both cycles 0·8 inch.

(1) Set out the crank in the four positions corresponding to the given data, as shown in Fig. 51, where the full lines refer to the positions for the instroke cycle, and the dotted lines to the outstroke cycle.

(2) Set out the corresponding positions of the eccentric sheave by measuring the angular advance, 130 degrees, in front of each crank position. The points p_1 and p_2 indicate the centres of the eccentric sheave for the respective events of admission and cut off, instroke cycle. Similarly the points q_1 and q_2 fix the eccentric sheave centres for admission and cut off for the outstroke cycle.

(3) With centres p_1 and p_2 respectively and radius equal to the length of the eccentric rod, assumed for the purposes of this example to be 12 inches, although any radius may be taken according to circumstances, strike arcs intersecting in P. With centres q_1, q_2 respectively and with the same radius, strike arcs intersecting in Q.

The end of the arm of the rocker coupled to the eccentric rod must now move in the arc of a circle passing through the points P and Q. Join PQ and draw the indefinite line OO bisecting PQ at right angles. The centre of the rocking shaft may be taken anywhere in this line. In the example it is chosen at Z so that the arm coupled to the eccentric rod is 3⅜ inches long. From Z draw a perpendicular to the line of motion of the valve, this perpendicular is the centre line of the arm coupled to the valve rod.

Digitized by Google

The travel of the valve depends now upon the ratio of the lengths of the two arms. In the figure the second arm is taken such a length that when the arm coupled to the eccentric rod is in either position, P or Q, the horizontal distance between the end of the second arm and its mid position is equal to 0·8 inch, the steam lap.

This adjustment cannot be made without disturbing the events of release and compression in both cycles, but in general they are brought nearer to equality by the introduction of the rocker.

The valve displacement curve after the introduction of the rocker is shown in Fig. 52. The dotted curve is the displacement curve without the rocker, that is, it is the curve of the diagram, Fig. 38, where it is assumed that the motion of the valve is simple harmonic.

It will be noticed from the valve diagram that, although the distorted displacement curve brings the events of the stroke into better agreement, the maximum displacement of the valve on either side of the centre line is unequal, resulting in unequal maximum port openings.

The advantage of this method of adjustment is that it may be made without sensibly interfering with the leads of the respective cycles.

Release and compression may be equalised in a similar way. The point R, Fig. 51, shows the position of the end of the eccentric rod for release and compression at $92\frac{1}{2}$ and $84\frac{1}{2}$ per cent. of the stroke respectively for the instroke cycle. S is the position of the end of the eccentric rod for release and compression at the same respective fractions of the stroke for the outstroke cycle. If the rocker arm moves in an arc of a circle through the points R and S, the equalisation of release and compression is accomplished.

A particular case arises when there is no exhaust lap, because in this circumstance the points R and S merge into one point, U say. There will therefore be only three points on the diagram, namely P, Q, and U, defining the path of the end of the rocker arm for equalisation of all the events. The centre of the circle through these points fixes the centre of the rocking shaft uniquely, although with some data the diameter of the circle is too small to enable a practicable rocker to be designed with its axis at this centre.

This method was first used by Professor Sweet and incorporated in the design of the Straight Line Engine*, the first of which was designed as an experimental engine for Cornell University.

61. The effect of a rocking lever on the angular advance of the eccentric sheave and on the steam admission. Angle

* Professor Thurston, *Stationary Steam Engines*, J. Wiley and Sons, New York, 1884. See also an article in the *American Machinist* for March 14, 1889 by F. A. Halsey.

Digitized by Google

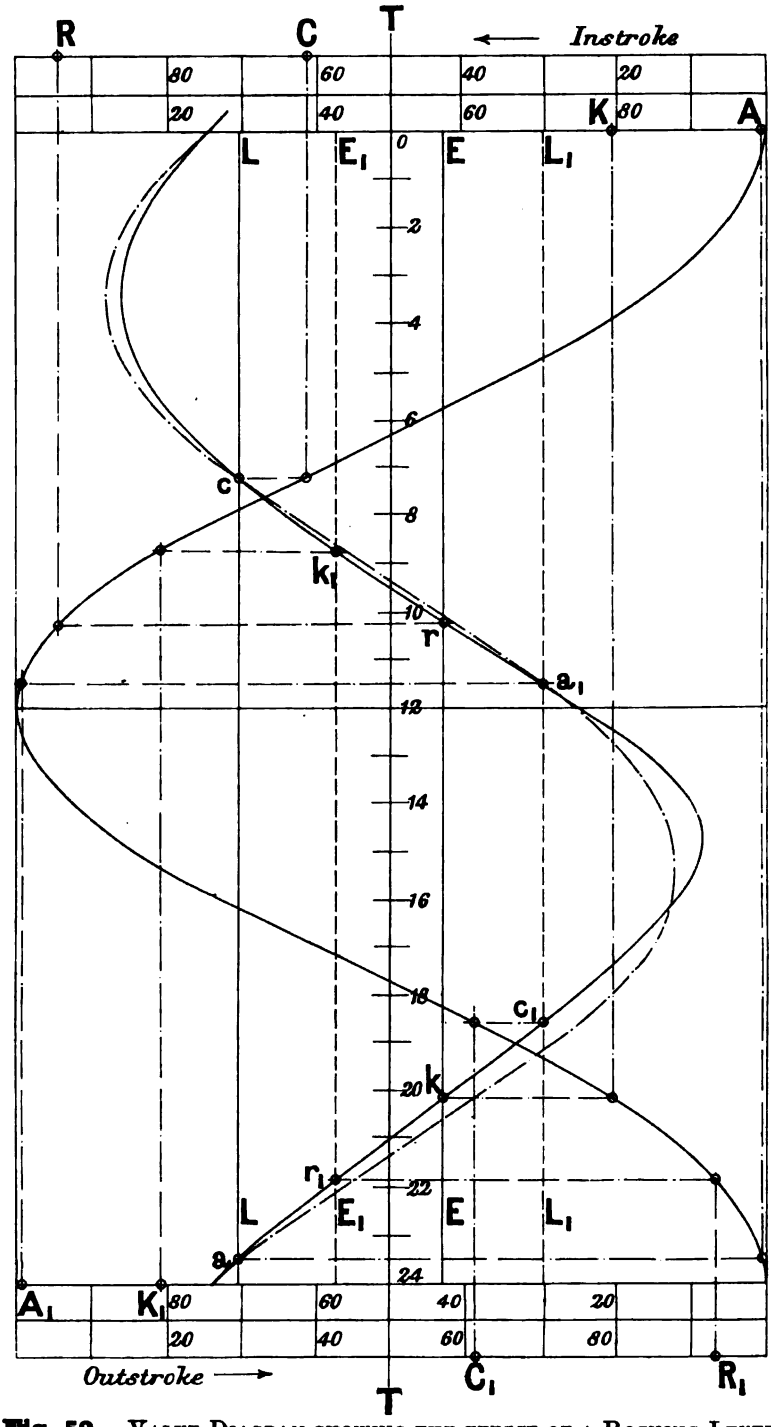

Fig. 52. VALVE DIAGRAM SHOWING THE EFFECT OF A ROCKING LEVER.

Digitized by Google

between centre line of main gear and valve gear. A rocking lever is sometimes used merely to transfer the motion of the end of the eccentric rod to a valve rod moving in a parallel plane, or to alter the direction of motion of the end of the eccentric rod in the same plane, or for both purposes combined. If the arms of the rocker in the first case are on the same side of the rocking shaft, as in Fig. 51, or if the angle between the arms is equal to the angle between the two directions of motion in the second case, no change is necessary in the general angular position of the eccentric sheave in relation to the crank. Of course in either case the angle between the arms of the rocker may be adjusted slightly for the purposes of the last Article. If the arms of the rocker are placed on opposite sides of the central shaft, the distribution of steam is that due to an imaginary eccentric keyed exactly opposite to the actual eccentric. If the rocking lever in Fig. 51, for example, had been made with the arms oppositely placed, as indicated by the dotted end, the distribution would be that due to an imaginary eccentric sheave keyed 50 degrees behind the crank. But such an eccentric sheave cannot effect a proper distribution unless the steam is admitted on the inside of the valve, see Figs. 34 and 35. Hence this change in the arms involves a change from outside to inside steam admission.

If outside steam admission is to be retained along with the use of a rocker with oppositely placed arms, the eccentric sheave must be keyed on the shaft in such a position that the imaginary eccentric sheave stands at the proper angular advance in front of the crank to determine the steam distribution with outside admission. Figs. 32 and 33 may be taken to represent the general angular positions of the imaginary eccentric sheaves which determine the distribution, and therefore the actual sheave must be keyed on at exactly 180 degrees from the positions given. If, for example, the rocker of Fig. 51 had had oppositely placed arms, the actual eccentric would have an angular lag of 50 degrees.

In general, if a rocker is introduced with arms on the same side of the centre, the general eccentric sheave position for a stated direction of revolution and steam admission is to be chosen from the Figs. 32 and 35. If a rocker is introduced with arms on opposite sides of the centre, the actual position of the eccentric sheave for a stated direction of revolution and stated steam admission will be exactly opposite the positions given in Figs. 32 to 35.

Sometimes the centre line of the valve gear is placed at an angle with the centre line of the main gear for constructive convenience. In such cases, if there is no rocking shaft interposed between the eccentric rod and the valve, imagine the two centre lines brought into coincidence by a turning motion about their common intersection in the crank axle,

Digitized by Google

and deal with the design of the gear or its examination by the methods given, remembering that the angular advance now used is the actual angle between the main crank and eccentric diminished or increased by the angle between the centre lines.

62. The design of the steam ports and passages. The minimum area of the steam passages is usually adjusted so that the steam shall have a velocity of from 4000 to 6000 feet per minute, though in special cases the greater of these figures is exceeded, and in other cases the smaller figure is not reached.

Neglecting the steam shut in the cylinder at compression, the volume of steam which has to be pushed out of the cylinder by the piston after release is practically equal to the effective volume of the cylinder itself.

Let A be the area of the cylinder in square inches,

V the average piston speed in feet per minute,

v the average velocity of the steam through a cross section of the steam passage whose area is a square inches.

Then the cubic feet of steam pushed through the exhaust passage per second is $\frac{VA}{144}$ cubic feet: and neglecting the effect of changes of temperature and changes in the dryness of the steam, this quantity must be equal to $va/144$, hence

$$VA = va \quad \text{.....(1)},$$

so that

$$a = \frac{VA}{v} \quad \text{.....(2)}.$$

The area of the steam passage is thus a fraction of the area of the cylinder, the value of which depends upon the piston speed.

With a piston speed of 600 feet per minute, the area of the steam passage must be 1/10 of the cylinder area, if the steam is to have a mean velocity of 6000 ft. per minute; and about 1/7 if the limiting velocity is 4000 ft. per minute.

With slide valves the area of the minimum cross section is commonly the area of the steam port at the entry to the cylinder. The passage itself is usually somewhat greater in cross section than the minimum determined from equation (2).

The width of the steam port is small in order to keep the travel as small as possible. The cylinder can be suitably designed if the length of the port is made about from 0·8 to 0·9 times the cylinder diameter. Calling the length of the port d, the width is a/d square inches.

Digitized by Google

The opening for steam is usually made about $\frac{3}{4}$ the full width of the port, so that the steam opening may be written

$$\frac{3a}{4d} \quad \text{.....(3).}$$

With piston valves the minimum area of the steam passage does not usually occur at the port entry but in the passage. If the nett circumferential width of the piston valve be taken as the length of the port, d, it will generally be found greater than the cylinder diameter. Hence in calculating the velocity of the steam in the case of piston valves it must be remembered that the velocity through the passage is in general greater than through the ports of the liner.

The value obtained from (3) is the maximum opening for steam. Fixing now the lead, the cut off, and the compression, the appropriate valve diagram yields the outside lap, the travel, and the inside lap. The two latter quantities are required for the design of the width of the exhaust port.

The steam escaping through the steam passages from the cylinder is guided by the inside of the slide valve into the exhaust passage through the exhaust port.

As the valve slides to and fro over the ports, the inner edge, A, regulating the release and compression, for say the instroke cycle, moves alternately towards and away from the more remote edge, B, of the exhaust port. When the edge A has moved as far as it can go towards the edge B, of the exhaust port, the area for the passage of the exhaust steam is a minimum. When designing the width of the exhaust port, care must be taken that this minimum width is not less than the width of the steam port. Usually it is made considerably larger.

Let p be the width of the steam port,

b the width of the bridge separating the steam port from the exhaust port,

x the width of the exhaust port,

l the inside lap of the valve,

t the travel of the valve.

Then when the slide valve is in its mid position, the edge A is distant $(x+b-l)$ inches from B. The greatest movement that the edge A can make towards B is half the travel, $t/2$. Then the minimum exhaust area is

$$(x+b-l)-t/2=pq,$$

where q is a number which should not be less than unity. If $q=1$, the minimum width is equal to the width of the steam port. Solving for x we have

$$x=pq+t/2+l-b \quad \text{.....(4).}$$

Digitized by Google

No difficulty will be found in arranging these formulae for inside admission.

63. Valve setting. The final adjustment of the valve gear to bring the centre of oscillation of the valve into its correct position relatively to the ports is technically known as valve setting. A reference to the valve diagram will make the object of the process clear. Suppose the valve displacement curve to be drawn on a separate sheet of tracing paper, whilst the piston displacement curve and the steam and exhaust lap lines are drawn on a sheet of drawing paper as described in Art. 50. Then the placing of the tracing of the vertical axis of the valve displacement curve into coincidence with the axis of the piston curve is equivalent to the setting of the valve so that its centre of oscillation is in the proper position with regard to the ports. If the tracing be moved a slight distance laterally, thus throwing the vertical axes out of coincidence, it will be found that the quantity most sensitive to the disturbances is the lead. Hence the method used in the workshop to set the valve is to adjust the length of the valve spindle, or valve rod, until the valve has stated leads for each cycle.

To perform the adjustment, set the crank at a dead point position by the method of Art. 47, or by a method similar in principle; then adjust the length of the valve spindle until the lead at the steam port, corresponding with the dead centre position of the crank, has a specified value. Now place the crank in the other dead point position and measure the lead of the valve at the corresponding port. It should be equal to the lead specified for that port. The adjustment is to be retried until the specified leads are obtained, although it should not be forgotten that the valve spindle will lengthen slightly when working in the hot steam, thereby introducing a slight change in the leads, and this should be allowed for in the setting. If it is found after repeated trials that equal leads of the specified amounts cannot be obtained, it is probable that the eccentric sheave has not been placed on the crank shaft at the proper angular advance. This point should be studied by moving the tracing of the valve displacement curve, vertically, over the drawing beneath it, since a vertical movement always corresponds to a change in the angular advance. An adjustment of the eccentric sheave on the shaft will generally enable the valve to be set with the specified leads. An error in the eccentricity of the sheave will also disturb the lead to an extent which can easily be studied from the valve diagram.

The lead may be observed, and directly measured, if the valve chest covers are off and the valve is designed for outside admission, or the

Digitized by Google

lead may be obtained from the marking of the valve spindle as explained in Art. 19.

Generally the leads are equal but in the case where the laps are adjusted to secure equality of cut off, the leads are necessarily unequal, but each has a specified value.

Another way of measuring or observing the lead is to draw out a section of the ports and the valve respectively on two pieces of board, and bolt the one to the cylinder cover or in fact to any part of the framework, and the other to the valve spindle, arranging them in such a way that the board representing the valve slides with its edge against the board representing the ports. If the boards are also fixed so that the distance from the centre of the actual exhaust port to the centre of the exhaust port of the drawing on the board is exactly equal to the distance from the centre of the slide valve to the centre of the drawing of the slide valve, the drawing on the board will always occupy the same relative position to the drawing of the ports that the actual valve occupies with reference to the actual ports. The valve may therefore be set by observations made on the boards. This method is equally applicable to inside steam admission and outside steam admission. The events of the stroke may also be readily followed on the boards, and the percentage of the stroke at which the different events take place may be found by combining the observations taken from the boards with a percentage scale marked off on the slide bars.

Digitized by Google

CHAPTER V.

INDEPENDENT CUT OFF GEARS.

64. The separate cut off valve. The examples already considered in connection with the simple eccentric gear have indicated that an early cut off is necessarily accompanied with early release and early compression. With high piston speeds, such for example as those used in locomotives, early release and compression become an advantageous feature in the distribution. Locomotives running at high speed commonly cut off as early as 20 per cent. of the stroke with release and compression occurring in the region of 50 per cent. of the stroke. Many examples of this will be found in the chapter on Reversing Motions. But with the low piston speeds usual in factory engines the case is altogether different. Here the pressure drops to the back pressure at release, whilst the piston moves through a very small fraction of its stroke, consequently so far as the nett work done on the piston is concerned the stroke is ended at release. If, for example, release takes place at 40 per cent. from the end of the stroke, the stroke is virtually shortened by that amount. This, combined with the necessarily accompanying early compression, results in a very attenuated indicator card.

To gain the advantages resulting from an early cut off and yet at the same time to avoid any prejudicial interference with the release and compression, a separate cut off valve is employed.

In the Gozenbach* design for this purpose, the steam chest is divided into two parts by means of a partition parallel to the face of the steam ports leading to the cylinder. There are thus two steam chests, an upper and a lower. The steam pipe opens into the upper steam chest. Steam ports are formed in the partition, their general disposition being parallel with the steam ports of the cylinder in the lower steam chest. A slide valve without any exhaust cavity is worked across the ports of the partition by an independent valve gear, thus admitting and cutting off steam to the lower steam chest. A slide valve of the ordinary type

* See Zeuner's *Treatise on Valve Gears.*

Digitized by Google

works in the lower chest distributing steam to the cylinder in the ordinary way. It is designed so that steam is cut off late in the stroke, say 75 per cent., and providing the lower chest were continuously filled with steam, the engine would always work with 75 per cent. cut off.

The valve working across the ports in the partition may however be set to cut off the supply of steam to the lower chest at an earlier fraction of the stroke, in which case no steam can get through the steam port opened by the main slide valve to the cylinder after this cut off has taken place. In this way cut off is determined by the partition valve, whilst admission, release, and compression, are determined by the main slide valve. The cut off point cannot be very sharply defined with this arrangement, because there is a considerable amount of steam in the lower chest after steam has been cut off at the partition, and this of course finds its way into the cylinder through the main valve. The partition valve or "separate cut off valve," as it is called, is practically a stop valve worked by an independent valve gear.

In the design patented by Paxman in 1885, the partition is not continuous through the steam chest, but forms a kind of fixed bridge through which steam ports are cut. The steam chest is therefore not divided into two separate parts, and to prevent steam getting through the main valve it is carried up so that its upper surface slides in contact with the lower surface of the bridge, ends being added to the valve, thereby forming ports or passages in the main valve through which the steam, coming through the bridge ports, is led to the distributing edges of the main valve. This change reduces the clearance inseparable from the Gozenbach design, and at the same time balances the main valve. The main valve is similar in general design to the valve illustrated in Fig. 53.

In the majority of the designs, where a separate cut off valve works in combination with a main distributing valve, the partition is done away with altogether and the cut off valve slides on the top of the main valve itself, the design of the main valve being suitably modified for this purpose. The simplest design, so far as the valves are concerned, is the case where the cut off valve is simply a plate moved to and fro over a main valve in which steam passages are formed.

Let V, Fig. 53, be an ordinary slide valve arranged to give a suitable release, compression and admission with a cut off of say 75 per cent. of the stroke. Add to the ends of the valve the portions indicated. The steam edges of the main valve, namely s and S, now become the inner and lower edges of the respective steam ways through the valve which are formed by the additions to the ends.

If a plate V_1 be placed on the back of the main valve (shown

Digitized by Google

lifted up a distance *ab* in Fig. 53) and if it be worked by a separate eccentric gear, a little consideration will make it clear that the combined motion of the main valve and the plate will result in cutting off the steam supply to the passages through the main valve at some definite fraction of the stroke. By properly proportioning the size of the plate and the travels of the respective eccentrics and their angular advances, this cut off can be made to take place at any stated fraction of the stroke between zero and the cut off determined by the main valve, without any interference with the other events of the stroke.

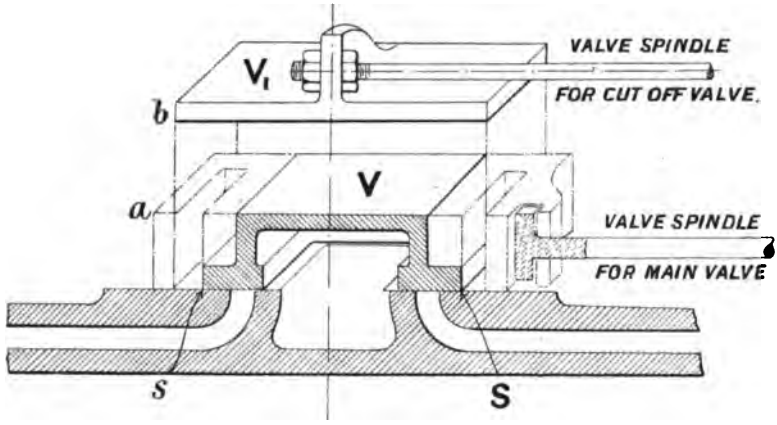

Fig. 53. Separate Cut Off Valve.

From what has already been done with regard to the simple eccentric gear it will be clear that if the cut off is to be susceptible of variation, the cut off valve must be so arranged that either

(1) its travel can be altered,

(2) the angular advance of its eccentric may be varied,

(3) its lap can be altered relatively to the ports in the main valve.

In some designs the valve gear is arranged to alter the travel and the angular advance simultaneously.

Fig. 53 shows the principle of the arrangement of a gear where the cut off valve is a plate and the cut off is varied by varying the travel.

65. The Meyer gear. *Constant Travel. Variable Lap.* In this arrangement, the travel of the valve is kept constant and the lap of the cut off valve is varied. That this may be done, the plate is divided into two parts connected by a left- and right-handed screw, the screw forming in fact the valve spindle. The valve spindle is connected to the eccentric

Digitized by Google

gear outside in such a manner that it may be turned relatively to the valve rod operated by the eccentric rod.

Fig. 54 shows an actual arrangement. V is the main valve, which is connected by its valve spindle L to a simple eccentric valve gear; and V_1, V_2 are the two separate parts of the cut off valve connected by the left- and right-handed screw K. This screw can be turned from outside by the hand wheel W, and it is connected to the valve rod of a simple eccentric gear by a joint which allows the necessary freedom of rotation. The wheel W is carried on a sleeve held in a fixed bearing, and the end of K, squared, passes through the sleeve. Thus K can be turned at the same time that it is free to move to and fro through the sleeve. The projecting head of the sleeve is screwed and it carries an index nut I, which serves to indicate how far the blocks are separated. Associated with I is a scale which is usually graduated so that the cut off corresponding to any angular position of the sleeve may be read off. The cut off edges of the main valve are at s and S respectively, and the cut off edges of the cut off valve are at t and T. The cut off valve is drawn Fig. 54, in its central position with regard to the main valve, and it will be noticed that the ports stand open on each side by the amount l. This quantity is the negative lap of the valve. If the wheel is turned so that the blocks are separated sufficiently to just close the ports on each side of it, it has no lap; and if by a further separation it overlaps the ports, the amount of overlap is, as in the case of the simple slide valve, the positive lap.

Cut off takes place when the expansion valve is at a distance from the centre of the main valve equal to the lap. This distance may be found in terms of the crank angle by plotting the displacement curve of the main valve and the displacement curve of the expansion valve on the same crank base. By adding the displacement curve of the piston cut off may be found in terms of the stroke. Since the expansion valve has no effect on the lead it may be made with unequal laps without interfering with the lead, so that cut off may be adjusted to take place at equal fractions of the two strokes without difficulty, for one stated cut off.

The way to examine the distribution of steam effected by gears of this type will be understood by working the following problem.

Example. The eccentric gears of an engine, fitted with the Meyer combination of main and cut off valves, have the following dimensions:

Main gear. Eccentricity of sheave, 1·5 inches.
Angular advance of sheave, 130 degrees.
Steam lap, 0·8 inch.

Digitized by Google

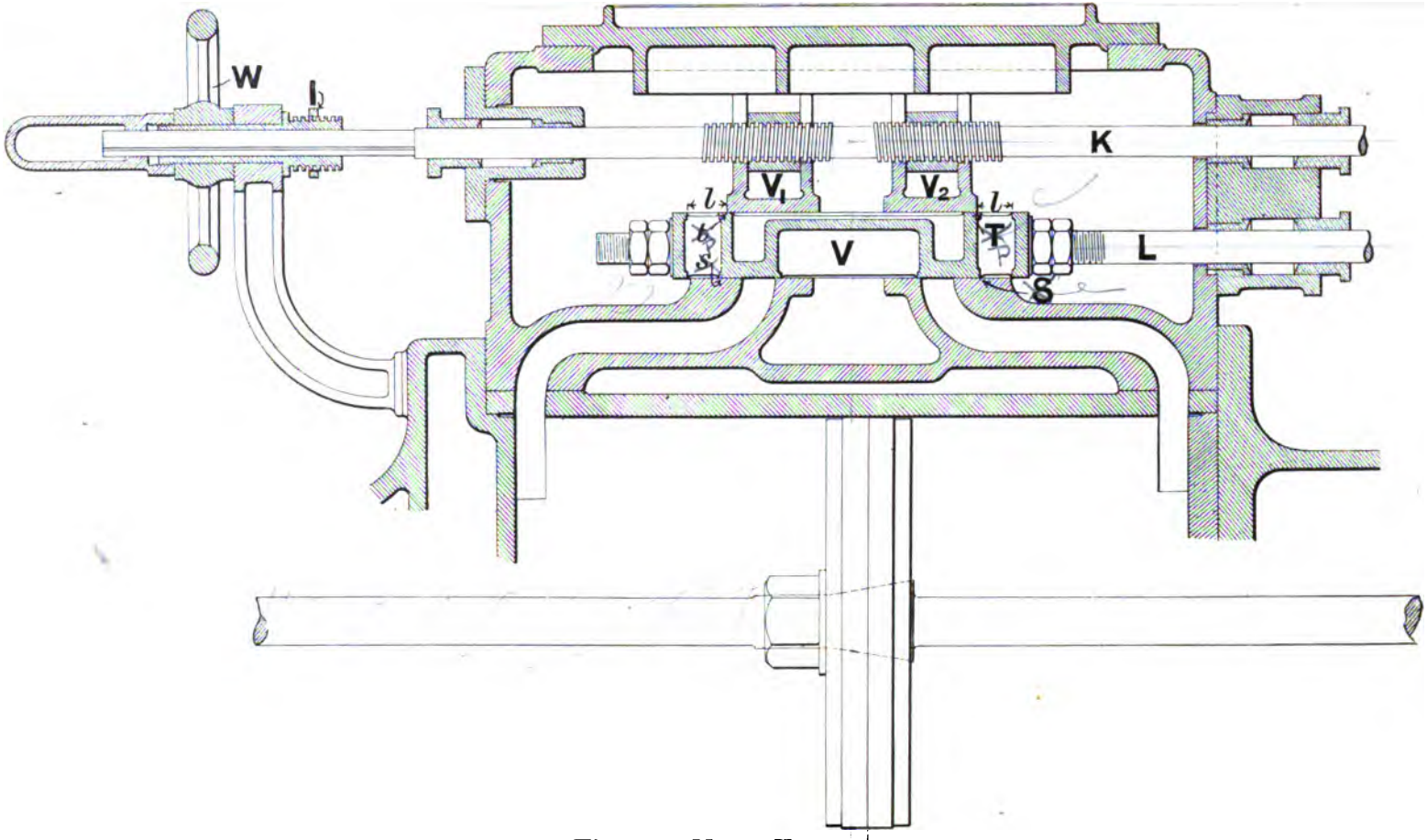

Fig. 54. MEYER VALVES.

Digitized by Google

Expansion gear. Eccentricity of sheave, 1·5 inches.
Angular advance, 180 degrees.

Find the lap of the expansion valve so that cut off may take place at 20 per cent. of both strokes.

The first step is to draw the valve diagram for the main valve in the way already explained in Art. 48. This is shown in Fig. 55, from which it will be seen that the distribution effected by the main valve is:—

	Instroke	Outstroke
Lead	0·17″	0·17″
Cut off	61 per cent.	69½ per cent.
Release	92½ per cent.	92½ per cent.
Compression	84½ per cent.	84½ per cent.

It will be observed from the diagram that the compression has been equalised by using different exhaust laps.

Next, add to the diagram the displacement curve for the expansion valve, using the data above. The ordinates to this curve represent the displacement of the expansion valve from the centre of its travel.

In order to solve the problem the distance of the expansion valve from the centre of the main valve must be known when the piston is at 20 per cent. of its stroke.

Consider the instroke first. From 20 per cent. on the instroke scale at the top of the diagram draw a vertical line to cut the piston curve, and then a line at right angles to cut the displacement curves in the points *a* and *b*, and the axis of the diagram in *c*.

Then, when the piston is at 20 per cent. of the instroke, the main valve is the distance *cb* from its central position, and the expansion valve the distance *ca* from its central position. The distance of the expansion valve from the centre of the main valve is therefore

$$cb - ca = ab.$$

This distance therefore represents the required lap of the expansion valve with respect to the ports of the main valve. But is it to be negative or positive lap?

This matter is settled by observing whether the displacement of the expansion valve from the axis of the diagram is greater or less than the displacement of the main valve.

When the displacement of the expansion valve is less than the corresponding displacement of the main valve, the lap is negative; when greater, positive.

The distance *ab* on the diagram measures 0·68 inch, and, so far as the instroke is concerned, this must be the negative lap of the expansion valve.

Digitized by Google

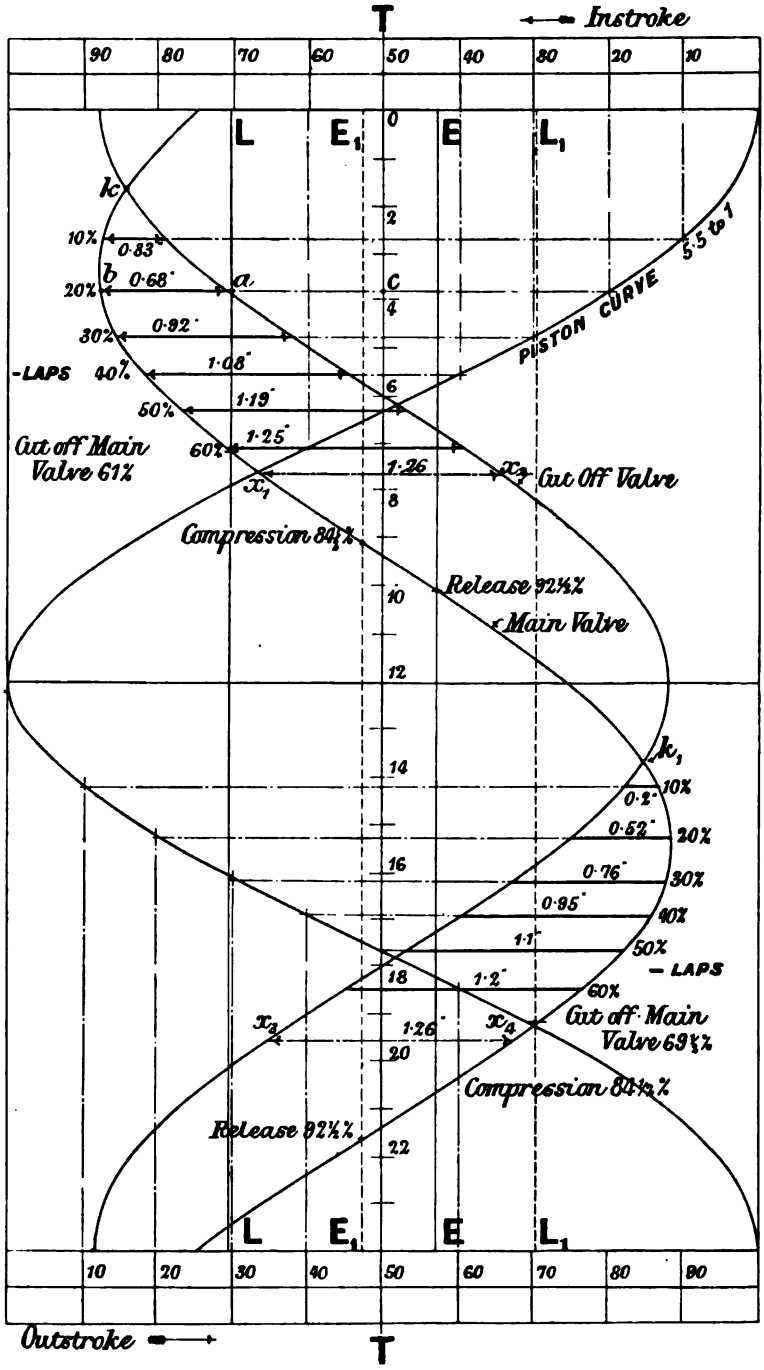

Fig. 55. Valve Diagram. Meyer Gear.

Digitized by Google

Consider the outstroke. Projecting, in a similar way to that just described, from the 20 on the outstroke scale, the intercept between the two valve displacement curves measures 0·52 inch.

If therefore the length of the valve spindle is adjusted, and the blocks set the proper distance apart, so that the expansion valve has these respective negative laps, cut off will take place at exactly 20 per cent. of the stroke for both strokes, whilst the leads remain equal at 0·17 inch, and release and compression retain the values stated above.

The problem may now obviously be extended to find the laps for a series of stated values of the cut off between zero and the cut off of the main valve. The projecting lines from 10 to 60 per cent., increasing by intervals of 10 per cent., are drawn in the figure for both the in- and the outstroke cycles, and the value of the intercepts between the two curves marked in. Thus, to cut off at 40 per cent. of the stroke for both strokes the negative lap for the instroke cycle must be 1·08 inches, and for the outstroke cycle 0·95 inch. The difference between the laps for 20 per cent. cut off is 0·16 inch. The difference for 40 per cent. is 0·13 inch.

The cut off valve can only be set to have one difference between the laps, because when once the difference is established by adjusting the valve spindle to the proper length, the turning of the wheel *W* changes the lap at each side by equal amounts.

Thus, after the diagram has been drawn, the differences of the laps must be written down and then that particular difference chosen which gives the best general result.

Taking the differences of the figures marked on the valve diagram,

Per cent. cut off	Difference of laps required to equalise the cut off
10 per cent.	0·13 inch.
20 „ „	0·16 „
30 „ „	0·16 „
40 „ „	0·13 „
50 „ „	0·09 „
60 „ „	0·05 „

If the valve spindle is adjusted for a difference of 0·16 inch, cut off will be exactly equalised over the range from 20 to 30 per cent.; very nearly equalised over the whole range from 10 to 40 per cent., and there will be small errors over the range from 40 to 60 per cent.

Engines provided with this kind of gear can therefore be set to give almost perfect indicator cards over a large range of expansion, the cut

Digitized by Google

off being equalised by the expansion valve, and the compression and release by the main valve.

At the point k on the valve diagram, where the two displacement curves cut one another, the expansion valve is in its central position with regard to the main valve, and if the expansion valve has no lap, cut off will take place. For regions above this point it will be seen that the expansion valve is at a greater distance from the axis of the diagram than the main valve, and therefore if cut off is required to take place at the excessively early fractions of the stroke to which the horizontals crossing this region correspond, the expansion valve must have positive lap. The same remarks apply, of course, to the region included between the horizontals through k_1 and the point 12 on the vertical axis.

When considering the general design of the gear it will be found convenient to draw the displacement curve for the expansion valve on tracing paper. It may then be pinned over the valve diagram for the main valve with any required angular advance, and the effect of varying this can be studied.

Care must be taken when designing the valves to see that, when the blocks are separated to the greatest distance, the ports in the main valve are not opened by the inside edges of the blocks. The blocks should be wide enough to prevent their inner edges from ever approaching near enough to the inner edges of the ports to allow steam to leak through.

The minimum overlap of the blocks on the inside can be determined with the aid of the diagram for a given gear in the following way. Adjust the cut off blocks to the maximum distance apart, and place them in their central position with regard to the main valve. Let the overlap on the inside in this position be denoted by u. Then when the valves are moving, this overlap is continually increasing and decreasing as the cut off blocks move about their central position with regard to the main valve. The greatest diminution of u is equal to the greatest displacement of the cut off valve from its central position with regard to the main valve, and this distance can be easily measured from the diagram. Call it z. Then the minimum overlap on the inside is $u - z$, and the maximum overlap is $u + z$.

It will be found by measurement that the greatest horizontal distance between the two displacement curves, Fig. 55, which is, of course, the greatest displacement of the cut off valve relatively to the main valve, is 1·26 inches at the two positions lettered x_1, x_2 and x_3, x_4 on the diagram. Hence when u is measured, the minimum overlap is $(u - 1{\cdot}26)$ inches.

When designing the valves the overlap u, in the central position, has

Digitized by Google

to be found for a given minimum value. Thus suppose the minimum overlap is to be 0·75 inch. Then,

$$3/4 = u - 1{\cdot}26,$$

from which $u = 2$ inches, say.

In this case the design of the valves would be regulated by the condition that when the blocks were adjusted to their maximum distance apart, the inside overlap in the central position would be 2 inches. The minimum distance between them will depend upon the range of cut off required, since enough room must be left to bring them close enough to give the negative steam lap required for the latest cut off.

The velocity of cut off is, in this case, the velocity of the cut off valve relatively to the main valve, at the instant the event occurs. This may be found from the diagram by finding the respective velocities of the main valve and expansion valve at cut off by the methods of Art. 49, and then subtracting the velocity of the main valve from the velocity of the expansion valve.

An instructive way of working problems connected with the relative motion of the expansion and the main valves is to consider the main valve at rest and then find an imaginary eccentric sheave which, keyed to the main shaft and coupled to the expansion valve, would give it a movement over the main valve precisely the same as it has when both valves are moving in the engine. The way to do this is to combine with each

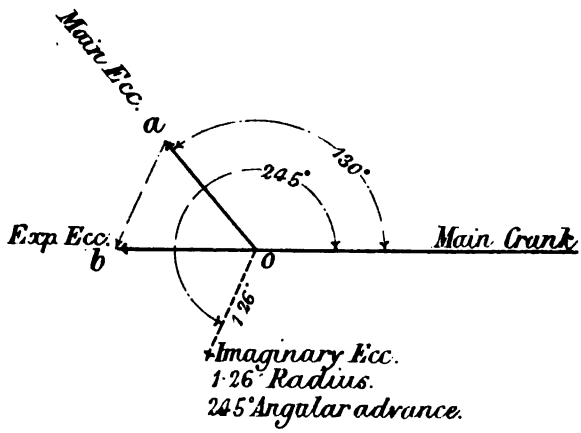

Fig. 56. MEYER GEAR. IMAGINARY ECCENTRIC SHEAVE.

valve a motion equal and opposite to the motion of the main valve, which has the effect of reducing the main valve to rest. The imaginary eccentric which will give the expansion valve the motion resulting from the combination is found by subtracting the eccentric radius of the main

Digitized by Google

valve as a vector from the eccentric radius of the expansion valve. The line giving this vector difference represents the imaginary eccentric in its proper angular position with regard to the main crank and of the proper radius. The way to take this difference is to set out the two eccentrics

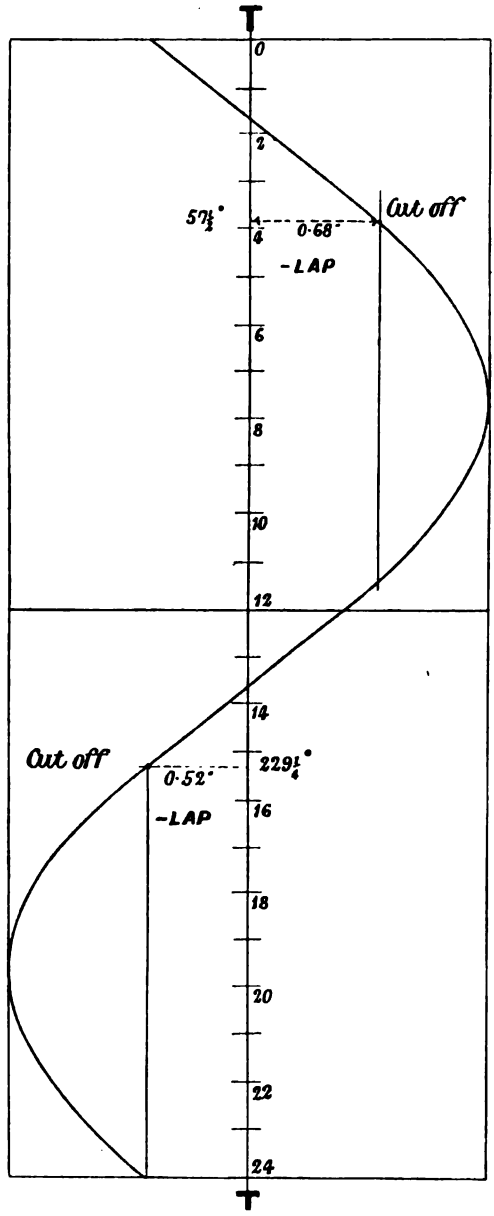

Fig. 57. MEYER GEAR. VALVE DIAGRAM FOR THE CUT OFF VALVE.

Digitized by Google

with their proper angular advances with regard to the main crank and then to join their ends, placing an arrow on this joining line "in circuit" with the subtracted vector. Thus, in Fig. 56, the main crank and eccentric cranks, corresponding to the example, are set out, and *ab* is the required difference. The dotted eccentric crank, drawn parallel to *ab* from the centre *O* in the direction of the arrow, represents the required imaginary crank, and this, if coupled to the expansion valve, would give it the proper movement relative to the main valve, which is now supposed uncoupled from its eccentric sheave and at rest. The angular advance of the imaginary crank is 245 degrees and its radius is 1·26 inches. The displacement curve corresponding to it can now be set out in the usual way. It is shown in Fig. 57. The negative lap is added to the figure and cut off is found just as if the problem were that of a simple valve gear. It will be observed, however, that the displacement curve is only suitable for determining cut off. The velocity of cut off can be measured from this curve by the method of Art. 49, and the maximum displacement of the expansion valve from its central position with regard to the main valve can be measured also.

It will not have escaped the student's notice that the displacement curve, found from the imaginary crank, is merely a curve representing the horizontal distances between the displacement curves of the main and expansion valves, shown in Fig. 55.

The design of the typical form of the Meyer combination may be varied in many ways. A design which allows short straight ports into the cylinder is shown in Fig. 58, which is reproduced from *Engineering*, June 13, 1884. The main valve is now made into two separate valves, *V* and *U*, each part carrying one of the two separate blocks which together form the expansion valve. The form of valve diagram for this case is of course exactly the same as in Fig. 55, the separation of the main valve making no difference to the distribution which it effects. Each of the valve spindles, *P* and *Q*, is coupled up to a simple eccentric gear.

The exhaust space is marked *E*. The modification of the exhaust part of the valve, necessary in consequence of the division into two parts, can easily be followed on the drawing.

In setting the valves of a Meyer gear of the usual type the following method may be employed. First set the main valve to equal leads. Then from a drawing find the total width between the cut off edges of the blocks when the cut off is to be, say, 30 per cent. of the stroke. This can be found by drawing the blocks in their central position with regard to the main valve and having the laps determined by the valve diagram for equalising the cut off at 30 per cent. Then adjust the blocks by

Digitized by Google

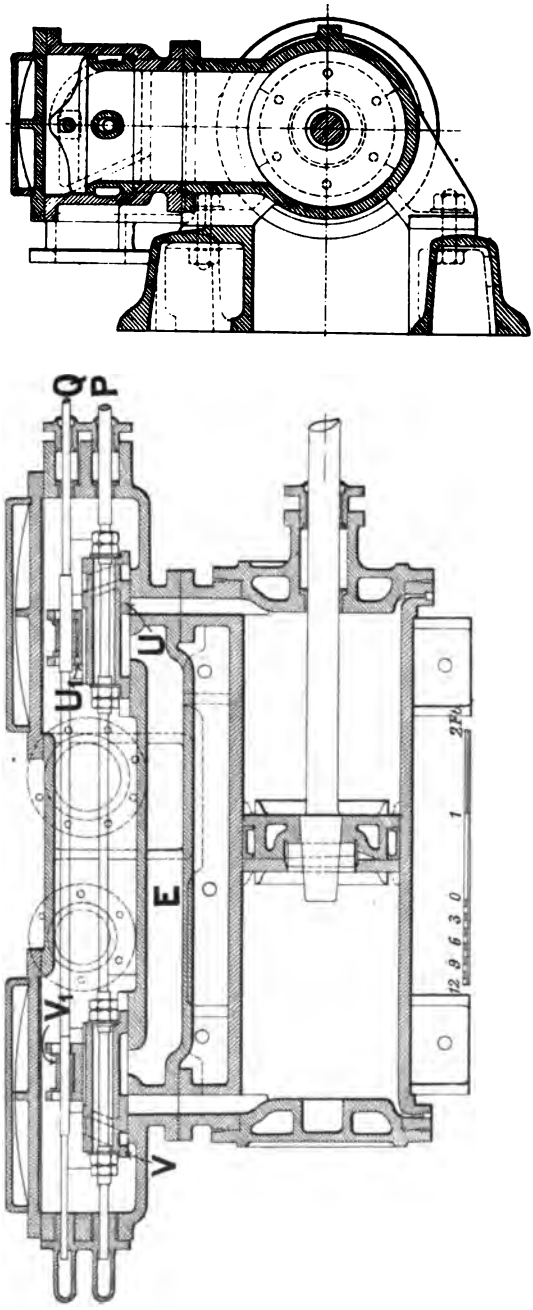

Fig. 58. Meyer Gear, with divided Main Valve.

Digitized by Google

means of the wheel *W* to this distance between the cut off edges. Next turn the engine until the piston stands at 30 per cent. of its stroke, say for the instroke cycle, which can easily be done by marking the slide bars. The length of the valve spindle is then to be adjusted so that cut off is just taking place for the instroke cycle. Turn the engine into the 30 per cent. position for the outstroke cycle. If everything has been correctly done the expansion valve will be just cutting off steam for the cycle. This last operation is really a check on the accuracy of the work.

The lap with which the cut off valve must be set, to cut off at a given percentage of the stroke, may readily be found by means of the

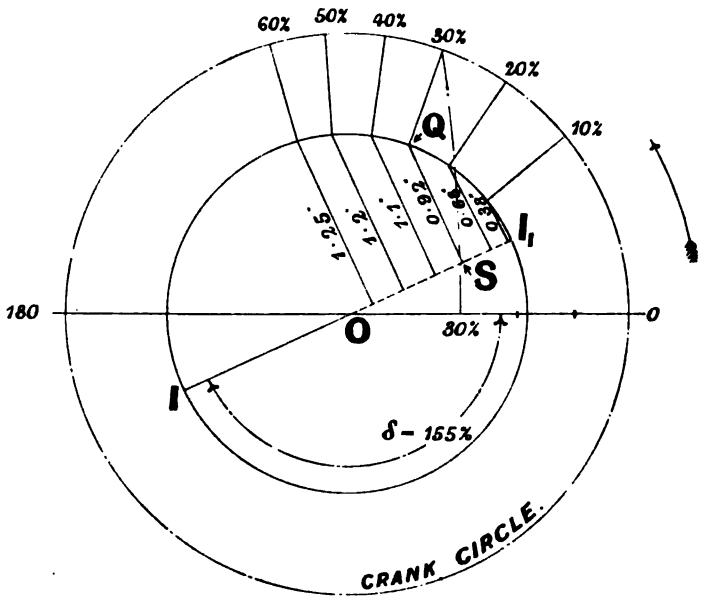

Fig. 59. Meyer Gear. Reuleaux Diagram applied to find Laps of Cut Off Valves.

Reuleaux valve diagram, the properties of which are described in Art. 53. When using it for this purpose, consider the main valve at rest and the expansion valve to be driven by the imaginary eccentric just discussed. Thus, the imaginary eccentric for the example just considered has been found to have a radius of 1·26 inches and an angular advance of 245 degrees. Referring to the description of the Reuleaux diagram in Art. 53, it will be seen that the angular advance, less 90 degrees, is the quantity to be set out behind the crank, and in the present example this angle is 155 degrees. Set out therefore, Fig. 59, an angle $\delta = 155$ degrees, and make *OI* 1·26 inches long. Find the crank position for the

Digitized by Google

given cut off, say 30 per cent., thus fixing the point Q on the eccentric circle, and following the instructions of Art. 53, drop a perpendicular on OI, which in this case must be produced through O in order to meet the perpendicular at S. QS is the distance of the cut off valve from the centre of the main valve, and therefore it is the negative lap to which the cut off valve must be adjusted. The crank positions corresponding to piston position from 10 to 60 per cent., at 10 per cent. intervals, are set out in the figure, and the negative laps corresponding to them dimensioned. If Q should coincide with I_1, the valve is to be set without lap, and if the cut off is so early that Q falls between I_1 and the horizontal diameter, the lap is positive. The laps for the outstroke cycle can be found in a similar way by setting OI behind the 180 degree position of the crank.

66. Rider cut off valve. *Constant travel. Variable lap.* In this gear, invented about 1869, there is a main valve and a cut off valve, each of which is worked by a separate eccentric gear as in the Meyer design, and the cut off is varied by varying the lap of the cut off valve. The point of difference between the two gears lies in the method of varying the lap. In the Meyer gear, as already explained, the lap is varied by moving the two parts into which the cut off valve is divided, in a direction along the valve spindle by means of a left- and right-handed screw. In the Rider design the cut off valve is in one piece, and the lap is varied by turning it about the axis of the valve spindle by means of the lever R, the joint between the valve spindle and the eccentric rod being such as to allow of this turning action. The necessary modification of the design of the valves is shown in principle in Fig. 60. The surface of contact between the two valves forms part of a cylindrical surface whose axis coincides with the axis of the cut off valve spindle K. The arrangement of the ports in the main valve and the way the lap of the cut off valve is varied with regard to them, will be understood from Fig. 61, which represents the cylindrical surfaces of contact developed out on the flat. $ABCD$ is the developed surface of the main valve V, the steam ports in it being equally inclined to one another and to the centre line. The developed surface of the cut off valve is represented by $EFGH$. The inclinations of the edges of the valve to one another and to the centre line are the same as the corresponding inclinations of the ports, so that the edges EG, FH, lie parallel with the corresponding steam ports. Therefore, the horizontal distances between the respective edges of the steam ports and the valve are constant on each side. This distance is marked L on the left-hand side and represents the negative lap of the valve, it being assumed

Digitized by Google

that the cut off valve is in its central position with regard to the main valve. When the engine works with the valves in this relative angular position with regard to one another, cut off will be determined by the negative lap L. If the cut off valve is turned into a new angular position, by means of the lever R, the lap will be altered. Thus suppose the new position is shown in Fig. 61 by $E_1F_1G_1H_1$; the negative lap has changed

Fig. 60.

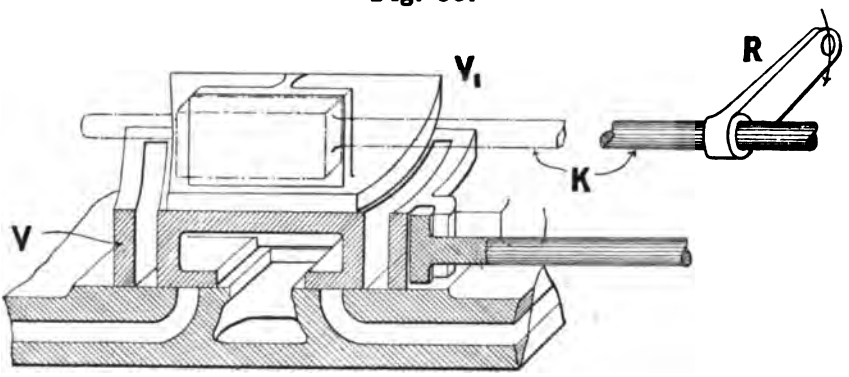

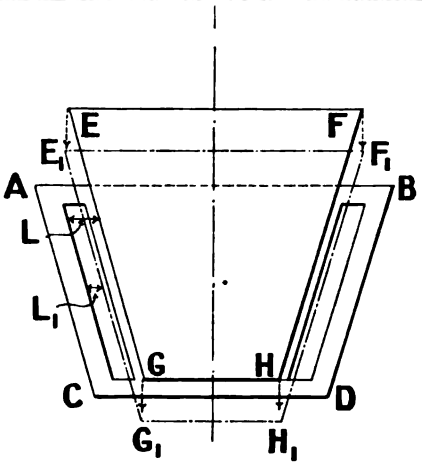

Fig. 61.

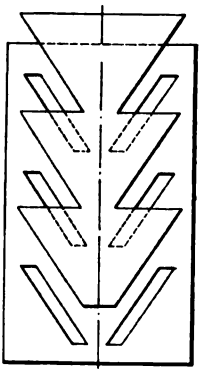

Fig. 62.

RIDER VALVE.

from L to L_1. In this way the lap may be varied between stated limits, and in practice the variation is usually effected by means of a governor connected to the arm R. The full consideration of the gear therefore involves a discussion on governing, and this is outside the plan of the present volume. It may be stated, however, that directly the angular position of the cut off valve is given the lap is known, and the valve diagram can be set out in exactly the same way as for the Meyer gear.

Digitized by Google

There are variations of the design shown in Fig. 60 all alike in principle. One common arrangement is to continue the surfaces of contact round the axis, so that the cut off valve becomes a piston valve. In this case, if the inclined ports were made continuous round the inside cylindrical surface of the main valve, the horizontal distance between the wide ends would be inconveniently great. This difficulty is evaded by cutting them in a series of steps, as indicated in the developed surface, Fig. 62, which shows also the corresponding saw tooth edges of the cut off valve. Of course this stepwise arrangement of ports may be made in any case whether the cut off piston valve is a piston valve or not.

The obvious advantage of making the cut off valve a piston valve is that it is balanced as regards the main valve. Working examples of the Rider valve can be seen at South Kensington Museum.

67. Cut off plate. *Constant lap. Variable travel.* Fig. 63 shows an actual example, which has kindly been supplied by Messrs Marshall, Sons and Co., Gainsborough, of a cut off plate in which the travel is varied. This design has already been illustrated in principle in Fig. 53. It will be noticed that the main valve, so far as the steam distribution is concerned, is divided into two parts, V and U, involving a division of the exhaust ports into two parts, P being the common exhaust passage leading away to the condenser or the atmosphere as the case may be.

The two ends of the valve are held together by connecting ribs along the sides of the valve, these ribs being connected with one another by a cross piece, whose cut T section is seen in the drawing. The two ends U and V, the side connecting ribs and the cross piece are all cast together. The valve spindle passes through the part U of the valve and is secured to the central cross bar by the lock nuts seen in the drawing. The cut off valve V_1U_1 is formed in one piece: the valve spindle passes through the valve and is secured by lock nuts screwing down on to appropriately formed surfaces at each end. A feature to be noticed is that the main valve is double ported with regard to the cut off valve. This involves the cutting of a steam port through the cut off plate at each end. Thus, considering the left-hand end, a and b are the respective cut off edges of the plate, A and B being the corresponding edges in the main valve. The cut off edge of the main valve is marked s, the corresponding edge in the cylinder ports being S. The corresponding edges for exhaust are e and E.

The way the travel of the valve is varied will be understood from Fig. 64, which shows a general arrangement of the valve gear. The eccentric working the cut off valve is not connected directly to the valve rod Q, but to a link which it oscillates about a fixed centre C. The

Digitized by Google

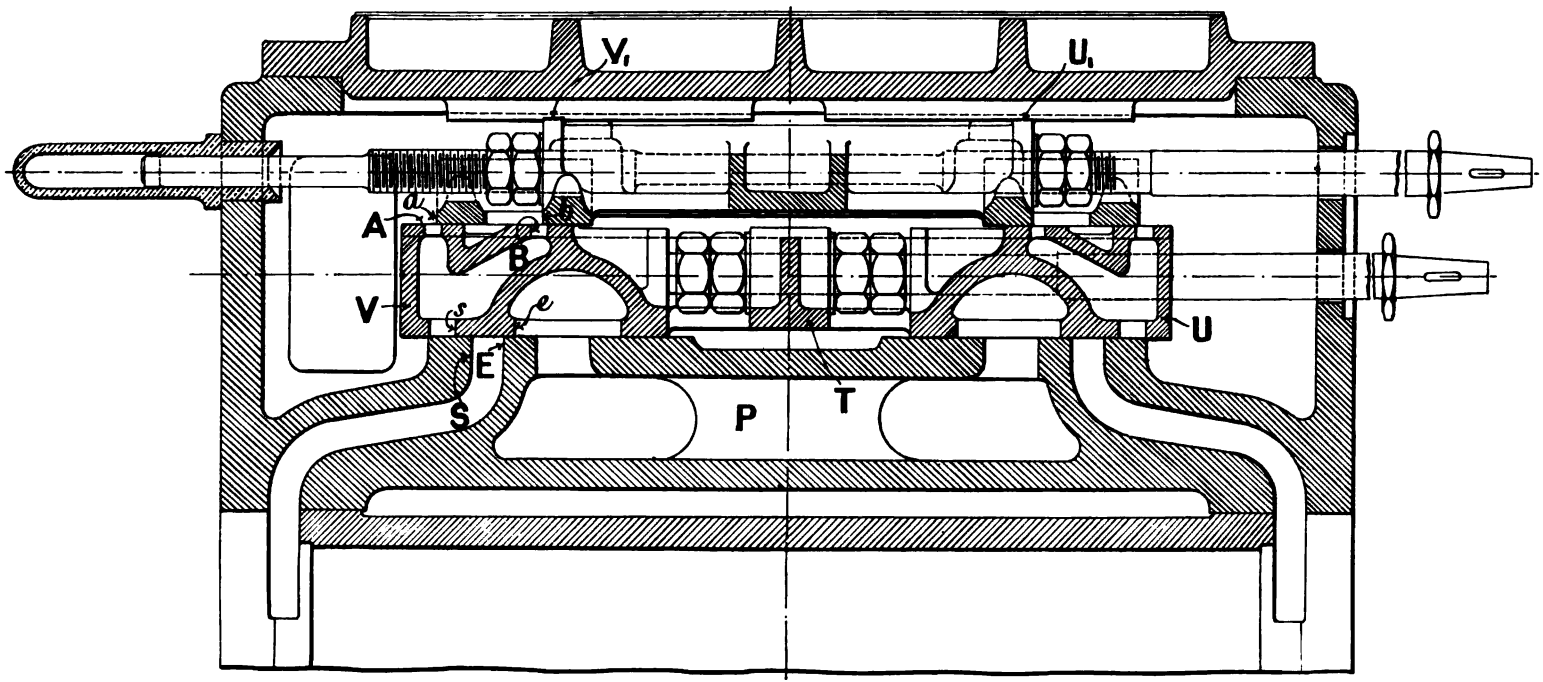

Fig. 63. General arrangement of a Main Valve and a separate Cut Off Valve with Invariable Lap.

Digitized by Google

valve rod Q is jointed to a block M sliding in the slot of the link, its position being determined by the governor acting through the rod G. When the governor is running at a constant speed, the centre F, about which the suspending link G is free to swing, is a fixed point, and the stroke of the block M is greater or less than the stroke due to the eccentric sheave driving the link, approximately in the ratio of d to c. Hence if r is the radius of the cut off eccentric, the half stroke of M is given by

$$\frac{d}{c} \times r,$$

it being understood that d is a variable quantity depending upon the speed of the governor. Neglecting the obliquity of the valve rod Q, due to the constraint of its motion by the suspending link G, and the obliquity of the eccentric rod, the above expression is the half stroke of the valve. Thus for a given value of d the valve diagram can be drawn as in Fig. 55.

68. The Corliss gear. This gear was introduced about 1849 by G. H. Corliss, of Providence, U.S.A. The characteristic features of the gear are four independent distributing valves of the kind illustrated in Figs. 23 to 26, two for the admission and cut off of steam, and two for the release and compression; and a valve gear mechanism which gives a continuous rocking motion to the exhaust valves, and at the same time allows the steam valves to cut off the supply of steam sharply at a fraction of the stroke determined by the governor. Amongst the many forms of the gear which have been devised, the Spencer Inglis type made by Messrs Hick, Hargreaves and Co., occupies a prominent place. The rocking valves of this type have been described in Art. 28, and the general arrangement of the gear used to work them is shown in Fig. 65. The basis of the mechanism is a four bar chain, six of which combine to form the mechanism for working the four valves, and of these, two have a coupling rod of peculiar construction.

Consider the exhaust valve E in the figure. A circular plate, centred at A, is coupled to an eccentric on the crank shaft by the pin Z, so that AZ, the eccentric rod, and the eccentric form together a four bar chain. A pin B in the plate is coupled to the crank arm CD by the coupler BD, this combination forming a second four bar chain. Similarly A, B_1, C_1, D_1 is the chain for the exhaust valve E_1. There is a similar four bar chain for each of the steam valves S and S_1; but when the cut off is to be made automatic the coupler in each of these two chains is made telescopic, and the connection between the two halves can be temporarily destroyed by means of a trigger. Immediately the two halves

Digitized by Google

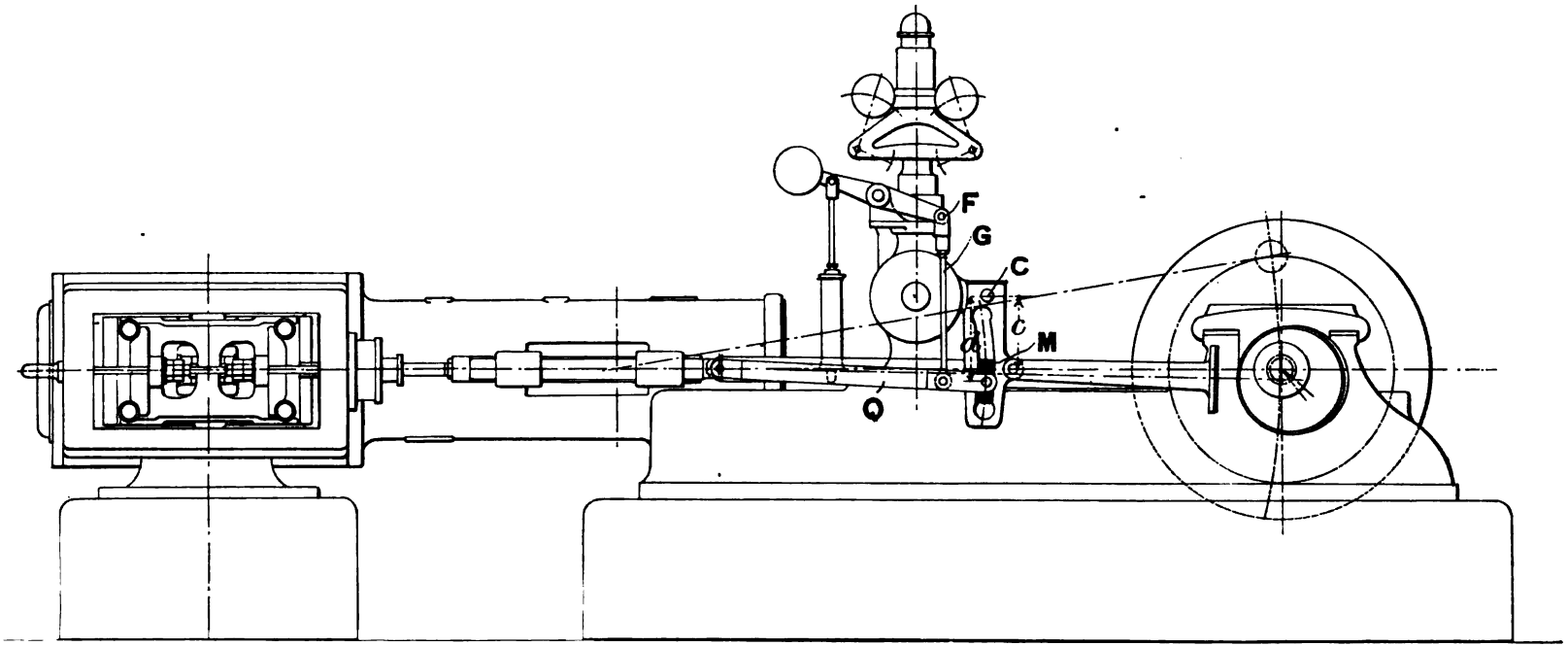

Fig. 64. General arrangement of the Valve Gear for automatically varying the travel of the Cut Off Valve.

Digitized by Google

are disconnected, the steam valve corresponding to the coupler is unconstrained by the valve gear, and a strong spring Q, in a dashpot P, immediately closes the valve. The way this is done can be seen from the figure, which shows the coupler to the right-hand steam valve in detail.

AJ and KL are the two cranks of the four bar chain to the valve S_1 and JK is the telescopic coupler, one part of which terminates at j, and the other part at k. The part Jj has a square block R formed about the middle of its length to which two flat springs are bolted which stretch along to, and engage with, projections formed on the other part of the coupler.

The part terminating at k is suitably formed near the end K to carry a pin p, on which a trigger or catch T is free to turn, its turning being controlled by the curved lever h, terminating in the joint U. This point U is connected, through the rod G and the lever g, with a short shaft, to which the governor gives an angular motion as the speed varies, which angular motion causes a small motion of the point U. A corresponding point, U_1, on the left side receives a similar motion through the toothed sectors attached to the levers g and g_1. When the engine is running at a uniform speed, U, and of course U_1, are fixed points.

The steam valve S_1 is opened by the movement which puts the coupler in tension, the projecting edges of the springs belonging to the part Jj gripping on corresponding projections on the part Kk, and as the necessary movement towards the centre of the cylinder takes place, U being fixed, the trigger T turns relatively to the coupler, forces the springs apart, and thus casts the crank LK free from the valve gear. The part Jj continues its movement, but the part Kk instantaneously flies back under the action of the spring Q, the dashpot P moderating the action of the spring. This latter part remains at rest, the valve being closed, until the spring catches belonging to the other half glide over the projections and close up in the position where they engage with them immediately the movement is reversed. The instant at which the trigger T releases the spring catch depends upon the position of the point U. When the load is thrown off an engine of this type, the governor changes the position of U sufficiently to cause the release of the trigger so early in the stroke that hardly any steam is admitted to the cylinder. If a load be now suddenly thrown on, the governor immediately moves U to a position where steam is taken through a large fraction of the stroke. The control effected in this way is well exhibited when the engine is used to drive a rolling mill.

When the ingot is put in the rolls, the full load is thrown on the engine, but after a few seconds the ingot has passed through, and

Digitized by Google

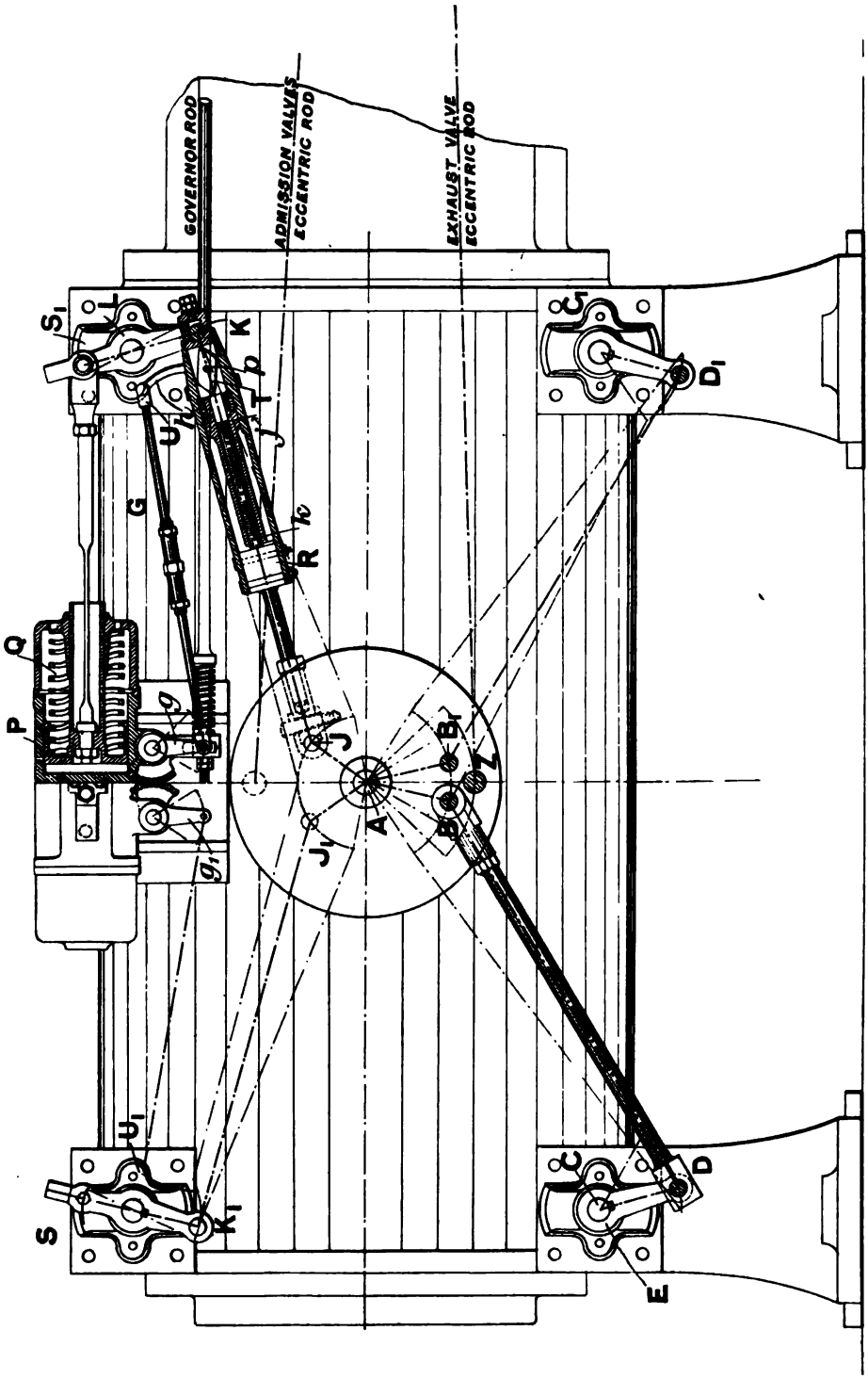

Fig. 65. Corliss Valve Gear.

Digitized by Google

nearly the whole load is thrown off; the valve gear answers at once, and automatically reduces the cut off. The cranks AJ and AJ_1 are determined by pins J and J_1 put in a circular plate, immediately behind the plate driving the exhaust valves, and connected to the crank shaft by a separate eccentric rod which is driven by a separate eccentric. There are thus two eccentric sheaves on the shaft driving respectively the steam valve plate and the exhaust valve plate.

The valve displacement curve for each of the exhaust valves can be set out by drawing the gear in a series of configurations corresponding to, say, 24 equidistant crank positions, and measuring off the corresponding displacements of the edge of the valve from some selected position, finding thereby 24 points on the diagram through which the curve must pass.

The shape of this curve will be very different from that shown in Fig. 38 for the simple eccentric gear. The displacement curves of the steam valves can be drawn in a similar way for a given position of U.

69. Sulzer gear. The Sulzer valve gear, as it is known to-day, was introduced in 1867. It is designed to work four valves per cylinder, two admission valves and two exhaust valves. A pair of steam and exhaust valves control each cycle in the way explained in Art. 2 and indicated diagrammatically in Fig. 1. Corresponding to these valves there are really two valve gears, one for each cycle. Fig. 66 shows a cross section of the high pressure cylinder of a recent Sulzer engine, taken through the valves controlling the instroke cycle, and the figure shows also the gear for operating the valves. The valve and valve gear are duplicated for the outstroke cycle, being placed at the end of the cylinder remote from that shown. Restricting our attention to the instroke cycle, steam is admitted to the cylinder by the valve S, shown open, and released from the cylinder through the exhaust valve E, shown shut. The steam valve has already been illustrated in detail, Fig. 7. The exhaust valve is similar in construction to the steam valve, having four seats. The valve gear may be analysed into a series of four bar chains, and to make this clear a skeleton diagram of the gear is drawn to the left of the actual drawing, so that the geometrical basis of the gear can be followed easily. The lettering on this skeleton diagram corresponds with the lettering on the actual drawing.

A shaft A, placed alongside the engine and driven by equal gearing from the crank shaft, is supported in journals carried by two brackets which are bolted to the cylinder itself, one of which, lettered B, is seen in the figure. Keyed to A is an eccentric sheave, the crank corresponding

Digitized by Google

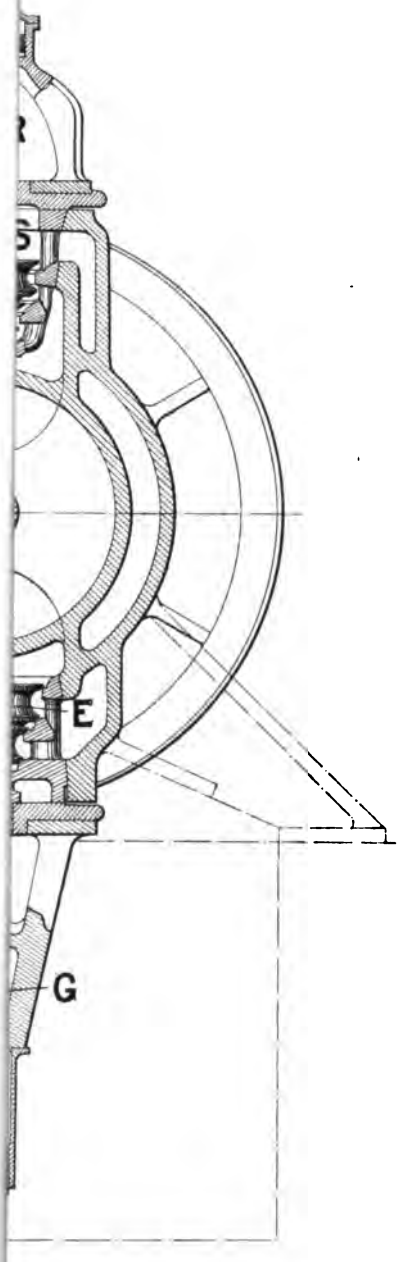

Digitized by Google

Digitized by Google

to which is shown by *Aa* in the skeleton diagram. A point *c* on the eccentric rod is jointed with a crank arm *cC*, which is centred on the shaft *C*, this shaft being merely a support for this crank. This combination of two cranks, *Aa* and *Cc*, and the connecting link *ac* forms, with the fixed frame, a four bar chain. Every point in the eccentric rod, shown black in the skeleton diagram, is thus constrained to move in a definite path.

First trace out the connection of this chain with the exhaust valve. One arm, namely *dD*, of the bell crank *dDe*, is connected by the rod *dg* to the crooked crank *gG*. The bell crank is centred on a supporting shaft *D*, carried by the bracket *B*. The crooked crank is jointed to the enlarged part of the valve spindle. These links, namely, the cranks *Dd*, *Gg*, and the coupler *dg*, together with the frame, form a four bar chain, the movement of which is determined by the connection of the arm *De* of the bell crank lever to the eccentric rod by the link *eh*. If the link *Gg* could vibrate, free from obstruction, about *G* as a fixed centre, the turning of the shaft *A* would merely cause the crank *gG* to execute vibrations about *G* as centre, and the exhaust valve *G* would always remain shut. Just below the lever *gG*, however, there is a bar, whose position is adjustable about the axis *i* by means of the bolt *j*. This is set up and clamped in position to act as a fixed fulcrum, so that the crooked crank at a certain instant in its downward movement is brought into contact with it, and then the crank acts as a lever and lifts the exhaust valve off its seat. In the skeleton diagram the fulcrum is shown at *k*. The actual arrangement is, however, equivalent to a moveable fulcrum, since the curved under-surface of the crooked crank *gG*, during its downward angular motion, touches the fulcrum piece along a line which moves continuously to the left. The leverage is changing, but it is greatest just at the opening of the valve and least when it is fully open. Consequently the velocity of the valve is small when it is opening and when it is closing. In this way the valve is let down on to its seatings gently, and is held there by the combined action of the steam and the spring seen in the drawing, after the crooked crank *gG* leaves the fulcrum piece altogether in the course of its upward angular movement.

Consider now the connection to the steam valve. One end of a coupling rod is jointed to the eccentric rod at *c* and the other end to a crank *Ll*, *L* being a fixed axis. Thus the two cranks *Cc*, *Ll*, and the rod *cl* form with the framework a four bar chain deriving motion from the eccentric sheave. Mounted on the axis at *l* is a catch or trigger *tlm*, one end of which is jointed by means of the coupling rod *mn* with a bell crank lever, whose central axis, *o*, is carried on the

Digitized by Google

eccentric rod itself. The other arm, *op*, of this bell crank is linked to the point *F*, which occupies a definite position when the governor is running steadily. The motion of the eccentric rod and the connection of the arm *op* to *F* together cause an angular motion of the bell crank about its axis *o*, which angular motion is transmitted by the coupler *nm* to the trigger *mlt*. The motion of the trigger is thus made up of two components, one the movement of its axis *l* in the arc of a circle about *L*, the other an angular motion about the axis *l*. The angular component changes as the position of *F* changes. The position of *F* is controlled by the governor, any change in its configuration being accompanied by a change in the angular position of the shaft *Q*, which is directly connected to the governor. The several positions occupied by *F* for cut offs of zero, 20, and 55 per cent. of the stroke are shown in the figure.

The path of the inside edge *t* of the trigger, consequent upon the combination of the motion of its axis *l*, with the angular motion about the axis when *F* is in the position for 55 per cent. cut off, is shown in the enlarged detail Fig. 67. Also the path when *F* has moved into the

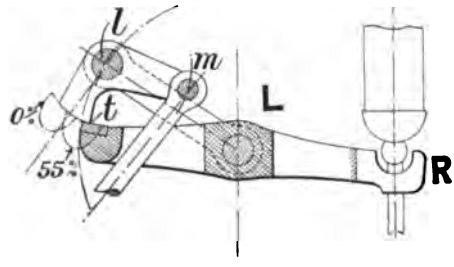

Fig. 67. Sulzer Gear. Detail of Trigger.

position where cut off takes place at the beginning of the stroke, that is at zero per cent. From these curves it will be clear that the downward motion of the trigger brings the inside edge *t* into contact with the lever *LR*, and opens the steam valve, when part of the curved path of *t* lies inside the arc of the circle passing through the extreme edge of the lever *LR*; and also that the trigger slips out of contact when the path of *t* cuts this circular arc. When this happens, the steam valve is free from the control of the valve gear and passes under the control of the spring and dashpot, the combined action of which urges the valve back into its seating gently, but at the same time sharply, so that there is little or no wire-drawing of the steam. The cut off may be thus varied from stroke to stroke according to the instantaneous position of

Digitized by Google

F, and since this position depends upon the slight variation of the governor speed, which in its turn depends upon the variation of the load against which the engine is working, the cut off is automatically adjusted to the variation of the load.

To set out a gear of this kind, with the object of drawing the path of the edge *t*, in order to find the cut off for a given position of the point *F*, the gear must be set out in a series of positions corresponding to, say, 24 equidistant crank positions, finding thus 24 points on the path of *t*. Joining these points by a curve, the intersection of the curve with the circular path of the edge of the lever *RL* is easily found, and by interpolation with the numbered points in the neighbourhood, the corresponding crank angle can be inferred, and hence the piston position. The process of setting out the gear for a stated crank angle and given position of *F* is as follows:—

(1) Set out the given position of *F*, the positions of the fixed centres *A*, *C*, *D*, *L*, *G*, and also the angular position of the eccentric radius corresponding to the given crank position.

(2) With radius *Cc* and centre *C* draw an arc, and with radius *ac* and centre *a* cut it in *c*.

(3) Set out the points *o*, *h*, along the eccentric rod, and with centre *o* and radius *op* draw an arc, and cut it in *p* with an arc of radius *Fp* drawn from the centre *F*.

(4) Draw the remaining arm *on* of the bell crank.

(5) With centre *L* and radius *Ll* draw an arc, and cut it in *l* by an arc of radius *cl* and centre *c*. This defines the position of the axis of the trigger. With radius *lm* and centre *l* draw an arc, and cut it in *m* with an arc of radius *nm* and centre *n*, thus defining the angular position of the trigger with regard to its axis.

(6) Set out the edge *t* of the trigger, and one point in the path is determined.

No difficulty will be found in setting out the position of the exhaust valve for a given position of the fulcrum piece *ij*.

In the actual drawing of these curves the long coupling rods may be "suppressed" in the manner illustrated in detail below in connection with the setting out of a Joy valve gear, Art. 126. In this way it is possible to draw the paths of the various points to a large scale without using an inconveniently large drawing-board.

Digitized by Google

CHAPTER VI.

THE ANALYTICAL METHOD.

70. The analytical method. A brief explanation may now be given of the method of working valve gear problems analytically. The analytical method contains implicitly within its symbols all the geometrical methods for the solution of valve gear problems. The tools in this case are merely a table of sines and cosines, which need not give the values to more than four significant figures; and a table of four figure logarithms. A student who can use these with rapidity and accuracy will find that problems connected with the simple valve gear may be dealt with as quickly by these means as with the tools of geometrical work, namely, compasses, set squares, etc., with the advantage of greater accuracy, and often of greater speed. The most advantageous way of working is to combine the two methods, using one as a check on the other.

The work may be divided into two distinct parts :—

(1) The calculation of the piston position for a given value of the crank angle θ, or *vice versa*.

(2) Calculations regarding the valve gear in connection with the crank angle θ.

Thus the crank angle θ is made the independent variable, and, for any assigned value of it, there is one corresponding position of the piston, and one position of the valve.

71. Crank and connecting rod. Considering first therefore the position of the piston in relation to the crank angle θ, it will be observed from Fig. 68, where OQ is the crank radius R, and BQ is the length of connecting rod l, that if the connecting rod is infinitely long the displacement X from the central position is given by Op, which is

Digitized by Google

equal to $R \cos \theta$; but that the effect of obliquity is to increase this distance by the amount pq. From the figure it will be seen that with

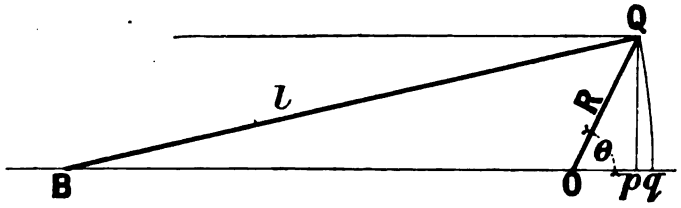

Fig. 68. CRANK AND CONNECTING ROD. EFFECT OF OBLIQUITY.

the cylinder to the left of the shaft pq is always positive; that is, for every crank position, the point q falls to the right of p, so that the effect of obliquity is the amount pq, measured from p towards q. If the cylinder were to the right of the shaft, pq would be negative, but all the diagrams in this book are drawn for the cylinder to the left, so that pq is always to be regarded as positive and is to be added to the quantity $R \cos \theta$, whether this be positive or negative. Hence for the piston displacement,

$$X = R \cos \theta + pq.$$

By Euclid, Book III. 35,

$$pq\,(Bp + Bq) = (Qp)^2.$$

But since pq is always small in comparison with Bp, very little error is introduced if Bq, which is the length of the connecting rod l, is written for Bp, so that $(Bp + Bq)$ becomes equal to $2l$. And Qp is equal to $R \sin \theta$; therefore

$$pq = \frac{R^2 \sin^2 \theta}{2l} \text{ approximately,}$$

and finally,

$$X = R \cos \theta + \frac{R^2 \sin^2 \theta}{2l} \quad \text{.....(1).}$$

Dividing through by R,

$$\frac{X}{R} = \cos \theta + \frac{R}{2l} \sin^2 \theta \quad \text{.....(2).}$$

This gives the fraction of the half stroke at which the piston is distant from its central position, and is positive for all positions to the right of the centre, and negative for all positions to the left. The fraction of the whole stroke at which the piston stands from the dead point corresponding to $\theta = 0$ is given by

$$\frac{1 - X/R}{2} \quad \text{.....(3)}$$

Digitized by Google

and from the dead point corresponding to $\theta = 180$ degrees, by

$$\frac{1 + X/R}{2} \quad \text{.....(4).}$$

$\frac{X}{R}$ in each case may of course be positive or negative.

To find the angle θ, for a given value of X/R, equation (2) must be solved for $\cos\theta$. Writing $(1 - \cos^2\theta)$ for $\sin^2\theta$, n for the ratio of the length of the connecting rod to crank l/R, and f for X/R, (2) reduces to

$$\cos^2\theta - 2n\cos\theta + (2nf - 1) = 0,$$

the solution of which is

$$\cos\theta = n - \sqrt{(n^2 + 1) - 2nf} \quad \text{.....(5).}$$

The minus sign is used before the root because the plus sign would give a value of $\cos\theta$ greater than unity, which is inadmissible.

If the connecting rod is $5\frac{1}{2}$ times the length of the crank, so that $n = 5{\cdot}5$, the equation becomes

$$\cos\theta = 5{\cdot}5 - \sqrt{31{\cdot}25 - 11f} \quad \text{.....(6),}$$

from which the different values of $\cos\theta$, corresponding to assigned values of f, may be computed.

It should be noted that the quantity to the right may come out either positive or negative. If positive, the angle θ lies between 0 and 90 degrees, or 270 and 360 degrees. If negative, θ lies between 90 degrees and 270 degrees. Which value of θ to take in any particular case must be determined by the conditions of the problem.

The piston curve, Fig. 38, is the graphical representation of (6) and could have been plotted from it.

72. The valve displacement. The valve displacement x is given in terms of the crank angle θ by (see Art. 42):—

$x = r\cos(\theta + \phi)$ for positive rotation of the crank with outside admission .....(1),

$x = r\cos(\theta - \phi)$ for negative rotation of the crank with outside admission .....(2),

$x = r\cos(\theta - \lambda)$ for positive rotation of the crank with inside admission .....(3),

$x = r\cos(\theta + \lambda)$ for negative rotation of the crank with inside admission .....(4).

All these relations are expressed by equation (1), provided that the angular position of the eccentric sheave with regard to the crank is

Digitized by Google

always measured in the positive direction; and for analytical work this restriction of ϕ to a positive value is very convenient. In what follows therefore it is to be understood that ϕ may have any positive value between 0 and 360 degrees, and that for the conditions expressed by equation (1), the value lies between 90 and 180 degrees, by equation (2) between 180 and 270 degrees, by equation (3) between 270 and 360 degrees, and by equation (4) between 0 and 90 degrees.

Considering equation (1), it is to be observed that, for a given value of θ, the angular advance being known, the corresponding value of x can be calculated without ambiguity.

For a given numerical value of x, however, there are four possible values of the angle θ. Thus, equal numerical values of x, namely *ab*, *cd*, *ef*, *gh*, Fig. 69, correspond to the unequal angles, *Oa*, *Oc*, *Oe*, *Og*. To discriminate between these angles, observe, first, that two of the values of x are negative and two positive: secondly that of the two negative values, one, namely *ab*, is increasing in value as the angle increases, and the other, *cd*, is decreasing as the angle increases. Similarly, of the two positive values, *ef* is increasing, and *gh* is decreasing, with the angle.

If a numerical value of x is assigned therefore, the corresponding value of the angle cannot be fixed until we know

(*a*) the sign of x,

(*b*) whether x is increasing or decreasing with θ.

In connection with the present subject, however, it is generally unnecessary to examine formally whether x is increasing or decreasing, because the appropriate value can be determined by other considerations.

Table 1 shows the sign to be given to x for any particular event in the stroke, both for positive and negative rotation of the crank, and also the way to discriminate between the two angles which correspond with, either a positive, or a negative, sign.

If the exhaust lap is negative in any particular case, the signs given in the table to release and compression must be changed.

With regard to negative rotation, it must be remembered, that although the crank is revolving negatively, no difference is made in the way of measuring the crank angle, that is to say, it is always measured in the counterclockwise direction, from the zero crank position. The crank in its negative rotation is therefore considered to go from 0 to 359, 358 degrees, etc., standing at 270 degrees when it has made one-quarter of a revolution, and at 90 degrees for three-quarters of a revolution.

Digitized by Google

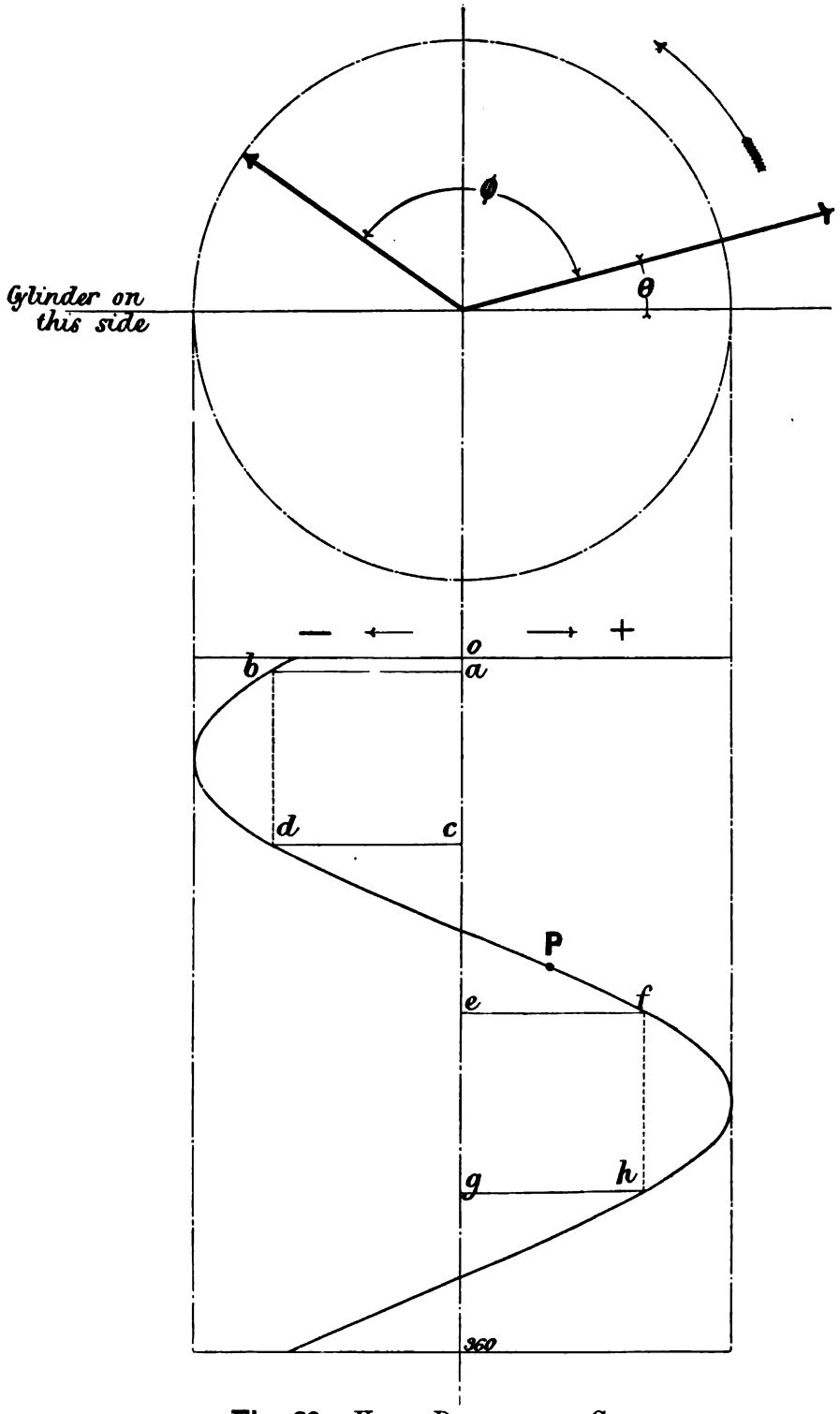

Fig. 69. VALVE DISPLACEMENT CURVE.

Digitized by Google

TABLE 1.

	Sign to be given to x for either positive or negative rotation of the crank				Crank angle θ	
	Outside admission		Inside admission			
	Instroke Cycle	Outstroke Cycle	Instroke Cycle	Outstroke Cycle	Positive Rotation	Negative Rotation
Admission...	−	+	+	−	Larger angle	Smaller angle
Cut off ...	−	+	+	−	Smaller angle	Larger angle
Release ...	+	−	−	+	Smaller angle	Larger angle
Compression	+	−	−	+	Larger angle	Smaller angle

Equation (1) involves two constants, r and ϕ. If the two constants are given, the corresponding displacement curve is completely determined. If these values are not given, the specification of two points on the curve enables them to be found. The specification of a point, P say, Fig. 69, requires that its distance, x, from the vertical axis be given, and also the corresponding value of the angle θ. Hence, to specify two points, the values x_1, θ_1 must be given for P and the values x_2, θ_2 for a second point Q. Inserting these in the equation for the curve,

$$\left\{\begin{aligned} x_1 &= r\cos(\theta_1+\phi) \\ x_2 &= r\cos(\theta_2+\phi) \end{aligned}\right\} \quad \text{.....(5)},$$

a pair of simultaneous equations from which r and ϕ may be found.

The equations may be written in a form which is sometimes useful. Expanding equation (1)

$$x = A\cos\theta - B\sin\theta \quad \text{.....(6)}$$

where A and B are written for $r\cos\phi$ and $r\sin\phi$ respectively. A and B are connected by the relation

$$A^2 + B^2 = r^2 \quad \text{.....(7)}$$

and the numerical value of $\tan\phi$ is given by

$$\tan\phi = \frac{B}{A} \quad \text{.....(8)}.$$

Digitized by Google

The actual value of ϕ depends upon the direction in which the crank shaft is to rotate and whether steam is to be admitted at the outside or inside of the valve. When these data are given, the quadrant in which the eccentric radius stands, relatively to the crank, is known. In this form the pair of simultaneous equations (5) become

$$\left.\begin{aligned} x_1 &= A \cos \theta_1 - B \sin \theta_1 \\ x_2 &= A \cos \theta_2 - B \sin \theta_2 \end{aligned}\right\} \quad \ldots\ldots\ldots\ldots\ldots\ldots\ldots (9),$$

from which A and B may be found, and hence r and ϕ.

These equations may be used for the solution of valve gear problems, directly x is expressed in terms of the quantities concerned in the distribution of the steam. The next table gives simultaneous values of x and the crank angle θ, each pair of values corresponding to a definite point on the displacement curve when the proper sign has been given to x, and the proper angle fixed upon from Table 1.

TABLE 2.

Numerical value of x equal to	Corresponding angle
Steam lap + lead ... ... $= L + e$	$\theta = 0$ or 180 degrees.
Steam lap ... ... $= L$	$\theta =$ crank angle at cut off or admission.
Exhaust lap ... ... $= l$	$\theta =$ crank angle at release or compression.
Steam lap + maximum width of port opening for steam $= L + W = r$	$\theta + \phi = 180$ or 0 degrees.
Exhaust lap + maximum width of port opening for exhaust $= l + w = r$	$\theta + \phi = 180$ or 0 degrees.

For instance, find the value of θ at "cut off" for the instroke cycle, in the case of negative rotation with outside admission, when the lap is 1 inch. In this case the angular advance, ϕ, must have a value between 180 and 270 degrees. Let it be 260 degrees. Then, from Table 2,

$$1 = r \cos (\theta + 260).$$

From Table 1, the sign of x for this particular event is stated to be negative, therefore the minus sign must be prefixed to the figure 1, and the larger value of θ will be the required result.

Digitized by Google

73. The valve velocity. The velocity, v, of the valve is found at once from the displacement by differentiating x with regard to the time. Thus

$$x = r \cos(\theta + \phi).$$

Therefore

$$v = \frac{dx}{dt} = -r \sin(\theta + \phi) \times \frac{d\theta}{dt} \quad \text{.....(10).}$$

When the crank is revolving uniformly, the angular velocity, $\frac{d\theta}{dt}$, is constant, and is equal to

$$2\pi n,$$

where n is the number of revolutions per second. Hence for uniform rotation,

$$v = -r \sin(\theta + \phi)\, 2\pi n \quad \text{.....(11).}$$

When using this expression, remember to express r in feet in order to get the velocity in feet per second.

The last three articles contain the whole of the mathematical relations involved in the analytical treatment of a simple eccentric gear. A few examples are added, starting first with the examination of a given gear.

74. Example. A valve gear has the following dimensions:—

$r = 3$ inches,

$\phi = 120$ degrees,

$L = 1{\cdot}375$ inches for both cycles,

$l = 0{\cdot}1$ inch " " "

n, the ratio of the length of the connecting rod to the crank $= 4$.

Since ϕ lies between 90 and 180 degrees, the engine rotates in the positive direction with outside admission. Calculate the value of the lead, and the fractions of the stroke at which the several events of admission, cut off, release and compression take place, for the instroke and outstroke cycles respectively.

The equation to the valve displacement curve is

$$x = 3 \cos(\theta + 120).$$

To find the lead, calculate the value of x when $\theta = 0$, and subtract the steam lap. Thus, at the dead point,

$$x = 3 \cos 120, \text{ from which } x = -1{\cdot}5 \text{ inches.}$$

The corresponding lead is therefore 0·125 inch.

The lead for the outstroke cycle is also 0·125 inch.

Digitized by Google

For cut off and admission to the instroke cycle,

$$-1{\cdot}375 = 3\cos(\theta + 120),$$

from which

$$\cos(\theta + 120) = -0{\cdot}458.$$

This is the numerical value of the cosine of an angle of 62 degrees 42 minutes, but since the sign is negative, the two angles having this value of the cosine are

$$180 - 63 = 117 \text{ degrees} = \theta_1 + 120,$$

or

$$180 + 63 = 243 \text{ degrees} = \theta_2 + 120.$$

The corresponding values of θ are -3 or $+357$ degrees, and 123 degrees. From Table 1, the latter being the smaller corresponds to "cut off" and the larger to "admission."

Proceeding in an exactly similar way with the value of the exhaust lap, it will be found that release and compression take place respectively at 152 and 328 degrees.

In this example, the steam and exhaust laps are assumed to be equal for the two cycles. The crank angles for the four events of the outstroke cycle can be found therefore by merely adding 180 degrees to those angles just found, subtracting 360 degrees when the sum is greater than 360 degrees.

To find the corresponding piston positions, introduce the value for the ratio of the length of the connecting rod to the crank, n, given above, into equation (2), Article 71, obtaining

$$\frac{X}{R} = \cos\theta + \tfrac{1}{8}\sin^2\theta.$$

For convenience of reference the details of this calculation, and the summary of the preceding ones, are given in the next Table.

The velocity of the valve at cut off for the instroke cycle, assuming the crank to make 3 revolutions per second, is found from equation (11) by introducing

$$r = \tfrac{3}{12} \text{ feet}, \quad \theta = 123 \text{ degrees}, \quad \phi = 120 \text{ degrees}, \quad \text{and } n = 3.$$

Thus $v = -\tfrac{3}{12}\sin(243^\circ) \times 6{\cdot}28 \times 3 = +4{\cdot}2$ feet per second.

The + sign indicates that the valve is at the instant moving in the positive direction, that is from left to right.

Referring to Table 3, it will be seen that the effect of the obliquity of the connecting rod is to cause a difference of the point of cut off in the two cycles of about $8\frac{1}{2}$ per cent. and a difference in the compression of about $3\frac{1}{2}$ per cent.

Digitized by Google

TABLE 3.

	Crank angle θ	$\cos\theta$	$\frac{1}{8}\sin^2\theta$	$\frac{X}{R}$	Corresponding percentage piston position
Instroke Cycle:					
Admission ...	357° = − 3°	+ 0·998	+ 0·0004	+ 0·998	99·9
Cut off ...	123°	− 0·544	+ 0·088	− 0·456	72·8
Release ...	152°	− 0·882	+ 0·028	− 0·854	92·7
Compression...	328°	+ 0·848	+ 0·035	+ 0·883	94·1
Outstroke Cycle:					
Admission ...	177°	− 0·998	+ 0·0004	− 0·997	99·8
Cut off ...	303°	+ 0·544	+ 0·088	+ 0·632	81·6
Release ...	332°	+ 0·882	+ 0·028	+ 0·910	95·5
Compression...	148°	− 0·848	+ 0·035	− 0·813	90·6

The compressions may be equalized at 94·1 per cent. by decreasing the exhaust lap belonging to the outstroke cycle, or at 90·6 per cent. by increasing the exhaust lap of the instroke cycle. Take the former case. First, compute the value of θ for a piston position of 94·1 per cent. of the stroke, from equation (5), Article 71, substituting 4 for the ratio of the length of the connecting rod to the crank, n, and the value − 0·883 for f, obtaining

$$\cos\theta = 4 - \sqrt{17 + 8 \times 0{\cdot}883},$$

from which

$$\cos\theta = -0{\cdot}9.$$

The two angles corresponding to this are 154 degrees 10 minutes, and 205 degrees 50 minutes. The outstroke cycle is under consideration, which begins at 180 degrees, so that the smaller value of the angle does not come into the cycle unless 360 degrees be added. But the angle may be looked upon as belonging to the previous outstroke cycle, and it gives the point at which compression takes place. The other value of the angle is evidently an impossible one for the event of compression, since it would have to take place when the crank had turned through only 25 degrees 50 minutes from the 180° dead point position.

The valve displacement corresponding to this compression angle is

$$x = 3\cos(154 + 120)$$
$$= 3\cos 86 = 0{\cdot}21 \text{ inch.}$$

Digitized by Google

From Table 1, the sign of the valve displacement at compression in the outstroke cycle is negative when the exhaust lap is positive. Therefore, since the sign of the displacement is here positive the exhaust lap is negative and would be set out to the right of the vertical centre line in the valve diagram.

75. The design problem. Given the maximum port opening for steam, W; the lead, e; the position of the piston at cut off, and the ratio of the length of the connecting rod to the crank; find the eccentricity, r; the angular advance, ϕ; and the steam lap, L. Assume positive rotation with outside admission.

First, find the crank angle corresponding to the given cut off from equation (5), Article 71, or read it from a piston curve drawn with the proper ratio of crank to rod.

The problem is now reduced to the finding of r, ϕ, and L, having given W, e, and θ_c.

In this case, the constants of the displacement curve have to be found, so that in the first instance the unknown quantities are A, B, and L. Examining the data, it will be perceived that it is not possible to find A and B from equations (9), Article 72, but that there is a relation amongst the data, from which a third equation can be formed. This relation is obtained from the fact that the steam lap, added to the maximum port opening, is equal to the eccentric radius. Equation (3), below, expresses this in terms of the unknowns A and B.

Considering the instroke cycle, select the pair of values from Table 2 corresponding to the dead point where $\theta = 0$ (since the engine is to work with outside admission and the crank shaft is to turn in the positive direction, x is of course negative), and insert these in equation (6), Article 72, thus forming equation (1).

Again select the values of the coordinates at cut off from Tables 1 and 2 and insert these in equation (6), Article 72, writing p for $\cos\theta_c$ and q for $\sin\theta_c$, and equation (2) is formed.

A, B, and L may now be found from these three simultaneous equations

$$-(L+e) = A \quad \text{.....(1)},$$

$$-L = Ap - Bq \quad \text{.....(2)},$$

$$L + W = \sqrt{A^2 + B^2} = r \quad \text{.....(3)}.$$

Eliminating L from (3) and (1) and squaring

$$-2Ab = B^2 - b^2, \text{ where } b \text{ is written for } (W - e) \quad \text{.....(4)}.$$

Eliminating L from (2) and (1)

$$A(1-p) = -e - Bq \quad \text{.....(5)}.$$

Digitized by Google

Eliminating A from (4) and (5), there results a quadratic in B, the solution of which is

$$B = \frac{+(W-e)q \pm \sqrt{2W(1-p)(W-e)}}{(1-p)} \quad \text{.....(6).}$$

A solution of this is always possible, since from the nature of a valve gear e is always less than W and p is always less than unity, so that the product under the root is always positive.

Having found B from (6), A can be found from (5).

Two values of B will be given by (6), but since by the given data ϕ is between 90 and 180 degrees, B (that is $\sin\phi$) must be positive; therefore the positive value must be taken and this inserted in (5) will give the proper value of A.

The steam lap can now be calculated from equation (1).

The eccentric radius, r, is equal to $\sqrt{A^2+B^2}$.

The numerical value of $\tan\phi$ is found from

$$\tan\phi = \frac{B}{A}.$$

Example:—

Let the data be,

Lead $= \frac{1}{10}$ inches.

Maximum opening for steam $= 1$ inch.

Crank angle θ at cut off $= 120$ degrees, so that

$$\cos\theta = -0{\cdot}5 = p,$$
$$\sin\theta = 0{\cdot}866 = q.$$

Moreover, suppose the crank shaft is to turn in the positive direction, and that steam is to be admitted at the outside of the valve.

Inserting the above values of p and q in (6),

$$B = +1{\cdot}615 \text{ or } -0{\cdot}576.$$

Substituting the positive value of B in (5),

$$A = -0{\cdot}995.$$

Using A in (1), L the steam lap is found to be 0·895 inch.

With this value of L in (3),

$$0{\cdot}895 + 1{\cdot}0 = 1{\cdot}895, \text{ the eccentric radius.}$$

The numerical value of $\tan\phi$ is found from

$$\tan\phi = \frac{1{\cdot}615}{0{\cdot}995} = 1{\cdot}624.$$

The angle corresponding to this is 58 degrees 24 minutes, but because rotation is to be positive, and steam is to be admitted at the

Digitized by Google

outside of the valve, the angle lies between 90 and 180 degrees (see Fig. 32), therefore its actual value is

$$180 - 58 \text{ degrees } 24 \text{ minutes} = 121 \text{ degrees } 36 \text{ minutes}.$$

These equations hold for positive or negative rotation with outside admission.

If positive values of the displacement are used in equations (1) and (2), the sign of e in (5) is changed, and the sign of the first term in the numerator of (6) is changed to minus. The equations then hold for positive or negative rotation with inside admission. For "cut off" at a given fraction of the stroke it is only necessary to solve the equations for one setting, positive rotation with outside admission for instance, because the numerical values of A and B are the same for all four cases.

76. The Meyer gear. So far as the main gear is concerned, the calculations are made in exactly the same way as for a simple gear. The new problem is to find the setting, and the lap of the cut off blocks, or plates, so that cut off may take place at a stated fraction of the stroke. In order to do this, the distance, ξ, of the expansion plates from their central position with regard to the main valve must be found in terms of the crank angle.

Let r, ϕ, be the eccentricity and the angular advance respectively, of the main eccentric sheave; and r_1, ϕ_1 the corresponding quantities for the expansion eccentric sheave.

Then x, the displacement of the main valve from its central position, is given by

$$x = r \cos(\theta + \phi),$$

and x_1, the displacement of the expansion plates from their central position with regard to the cylinder, by

$$x_1 = r_1 \cos(\theta + \phi_1).$$

Expanding these and writing generally A for $r \cos \phi$ and B for $r \sin \phi$, they become

$$x = A \cos\theta - B \sin\theta \quad \text{.....(1)},$$

$$x_1 = A_1 \cos\theta - B_1 \sin\theta \quad \text{.....(2)}.$$

The displacement, ξ, of the expansion plates from their central position with regard to main valve, is given by

$$\xi = x_1 - x = C \cos\theta - D \sin\theta \quad \text{.....(3)},$$

where

$$C = A_1 - A = r_1 \cos\phi_1 - r \cos\phi \quad \text{.....(4)},$$

$$D = B_1 - B = r_1 \sin\phi_1 - r \sin\phi \quad \text{.....(5)}.$$

Multiply and divide the right side of equation (3) by $\sqrt{C^2 + D^2}$.

Digitized by Google

Then the coefficient of $\cos\theta$ is

$$\frac{C}{\sqrt{C^2+D^2}} = \cos\psi, \text{ say,}$$

and the coefficient of $\sin\theta$ is

$$\frac{D}{\sqrt{C^2+D^2}} = \sin\psi,$$

and

$$\tan\psi = \frac{D}{C}.$$

Hence (3) becomes

$$\xi = \sqrt{C^2+D^2}(\cos\theta\cos\psi - \sin\theta\sin\psi),$$

which is equivalent to

$$\xi = \sqrt{C^2+D^2}\cos(\theta+\psi) = \rho\cos(\theta+\psi) \quad \text{.....(6).}$$

In this equation, ψ is the angular advance of an imaginary eccentric sheave of radius $\rho = \sqrt{C^2+D^2}$.

When the dimensions of the gear are given, C and D can be calculated, and from them ρ and ψ may be found and introduced into equation (6). Then, by means of (6), ξ can be calculated for any given value of θ. If θ is given for the cut off angle of the crank, the lap of the cut off plates, considered in relation to the ports in the main valve, is given by

$$L = \xi.$$

This lap is positive when x_1 is numerically greater than x, and negative when x_1 is numerically less than x.

To make use of equation (6) in the design of the cut off plates and adjusting gear, the process is first to calculate the values of the crank angles for cut off at, say, 10, 20, 30, 40, 50, 60 per cent. of the stroke, for both the cycles, and then, using these in (6), find the corresponding values of ξ. These values are the respective laps required for cut off at the fractions of the stroke from which the different values of the crank angles were calculated.

Comparing these values of L, it will be found that to secure equality of cut off at a given percentage of the stroke the laps must be different. The gear can be set to allow this difference in the laps. It will also be found that this difference requires to be changed for each cut off, to secure equality all through the range taken. This of course cannot be arranged for, because the valve can only be set for one difference between the laps. An example will illustrate the way of using the equations.

Digitized by Google

77. Example. Meyer gear. The following are data from an engine fitted with the Meyer cut off valve.

Ratio of the length of the connecting rod to the crank, 5·5 n
Eccentricity of main gear eccentric, 1·5″ ..... r
Angular advance of sheave, 130 degrees ..... ϕ
Eccentricity of cut off sheave, 1·5″ ..... r_1
Angular advance of cut off sheave, 180 degrees ..... ϕ_1

Find the lap of the expansion valve so that cut off may take place at 10, 20, 30, 40, 50, or 60 per cent. of the stroke, for both the instroke and outstroke cycles, and deduce from these laps the best setting of the expansion valve.

The first step is to calculate the series of crank angles corresponding to these given fractions of the stroke. These are to be computed by means of equation (6), Article 71, the numbers there introduced being those for a connecting rod 5·5 times the length of the crank.

The details of the calculation are set out in the following table. It may be observed that when the crank angle corresponding to a stated

TABLE 4.

The crank angle θ is found from $\cos\theta = 5{\cdot}5 - \sqrt{31{\cdot}25 - 11f}$.

Piston Position		f	$\cos\theta$	θ	Actual Crank Angle	
					Instroke	Outstroke
	Instroke		Dead Point		0°	0°
	10 %	0·8	0·762	40° 18′	40° 18′	319° 42′
	20 %	0·6	0·535	57° 36′	57° 36′	302° 24′
	30 %	0·4	0·318	71° 30′	71° 30′	288° 30′
60 %	40 %	0·2	0·109	83° 42′	83° 42′	276° 18′
50 %	50 %	0·0	− 0·090	84° 48′	95° 12′	264° 48′
40 %	60 %	− 0·2	− 0·284	73° 30′	106° 30′	253° 30′
30 %		− 0·4	− 0·471	61° 54′	118° 6′	241° 54′
20 %		− 0·6	− 0·652	49° 18′	130° 42′	229° 18′
10 %		− 0·8	− 0·829	34° 0′	146° 0′	214° 0′
Outstroke						
				Dead Point	180°	180°

Digitized by Google

piston position has been found for the instroke cycle, the angle in the outstroke cycle corresponding to this position is given by $360 - \theta$. The angles found in this way are shown in the right-hand column of the table.

With the given data, the respective values of C and D, from equations (4) and (5), Article 76, are

$$C = 1{\cdot}5\,(-1 - (-0{\cdot}6427)) = -0{\cdot}536$$

$$D = 1{\cdot}5\,(0 - 0{\cdot}766) \qquad = -1{\cdot}149$$

and hence $\qquad \rho = \sqrt{C^2 + D^2} = 1{\cdot}266,$

and $\tan\psi = \dfrac{-1{\cdot}149}{-{\cdot}536} = +2{\cdot}141$. ψ therefore is equal to 64° 58′, say 65 degrees, from the tables, but the negative signs above prefixed to both the numerator and denominator show that the angle is in the 3rd quadrant, so that $\psi = 180 + 65 = 245$ degrees.

Therefore from (3) Article 76

$$\xi = 1{\cdot}266 \cos(\theta + 245).$$

Introducing the values of θ given in Table 4 successively into this equation, the results in the second column of Table 5 are obtained for the instroke cycle, and those in the third column for the outstroke cycle.

TABLE 5.

Laps.

Cut Off	Instroke	Outstroke	Difference
10 °/₀	− 0·34″	− 0·20″	0·14
20 °/₀	− 0·68″	− 0·52″	0·16
30 °/₀	− 0·92″	− 0·76″	0·16
40 °/₀	− 1·08″	− 0·95″	0·13
50 °/₀	− 1·19″	− 1·10″	0·09
60 °/₀	− 1·25″	− 1·20″	0·05

The right-hand column gives the differences between the laps required to give equality of cut off at the stated fractions of the stroke. If the length of the valve spindle is adjusted so that when the cut off is at 20 per cent. of the stroke the laps on the valve are 0·68 for the instroke cycle, and 0·52 for the outstroke cycle, the cut offs at 10 and 40 per cent. will be nearly equalised, and at 20 and 30 per cent. they will be exactly equalised. The inequality at 50 and 60 per cent. must be accepted.

Digitized by Google

The cut off by the main valve in the engine from which these data have been taken occurred at 70 per cent. of the stroke in the outstroke cycle, and 62 per cent. in the instroke cycle. This inequality was of no moment, because the cut off for the normal conditions of working was between 20 and 30 per cent.

The main valve was set with unequal inside laps to equalise the compression points. Release by the main valve took place at 94·5 per cent. for the outstroke, and 96 per cent. for the instroke.

The engine was indicated, and the pair of cards corresponding to any cut off between 10 and 40 per cent. of the stroke were not sensibly different in area.

To find the velocity of cut off, the velocity of the expansion valve must be calculated with regard to the main valve. Thus, let v_1 be the actual velocity of the cut off valve at any instant, and v the corresponding velocity of the main valve, then the velocity of the expansion valve relative to the main valve is

$$v_1 - v.$$

This may be calculated by using expression (11), Article 73, to find the velocities separately, but the most expeditious way is to differentiate expression (6) with regard to the time, obtaining

$$\eta = -2\pi n \rho \sin(\theta + \psi) \qquad (7),$$

η being the velocity of the expansion valve with regard to the main valve.

It is instructive to calculate the velocity corresponding to the several cut offs of the instroke cycle given in Table 4, which Table gives also the several values of the crank angle θ required in the computation. The results are shown in the following Table 6. The factor with which the figures in the third column must be multiplied to give the result in feet per second, when the crank makes 2 revolutions per second, is $\rho\, 2\pi n = 1{\cdot}32$.

The minimum lap on the inside of the blocks may also be calculated. Referring to Article 65, it will be remembered that the blocks having been adjusted to their maximum distance apart, the minimum inside overlap is given by the expression

$$u - z,$$

u being the inside overlap when the blocks occupy their central position with regard to the main valve, and z the greatest diminution of u due to the motion of the blocks with regard to the main valve; z is in fact the maximum value of ξ. Hence the problem is reduced to finding for what crank angle θ

$$\xi = \rho \cos(\theta + \psi)$$

Digitized by Google

is a maximum, and this is evidently solved by making $\theta + \psi$ equal to 0 or 180, given $\rho =$ the maximum value of ξ. Hence the minimum overlap is always given by

$$u - \rho.$$

TABLE 6.

Velocities of cut off, in the example of the Meyer Gear. Instroke Cycle.

Data $r_1 = r = 0{\cdot}125$ foot.
$\phi_1 = 180$ degrees.
$\phi = 130$ degrees.
$n = 2$ revolutions per second.
Imaginary eccentric radius $= 1{\cdot}266/12 = 0{\cdot}105$ foot.
Angular advance of imaginary eccentric $= 245$ degrees.
$\eta = -0{\cdot}105 \sin(\theta + 245)\, 2\pi n.$

Cut off	Crank Angle	$\sin(\theta+\psi)$	Velocity Ft. per sec. when $n=2$
10 °/₀	40° 18′	− 0·964	1·27
20 °/₀	57° 36′	− 0·842	1·11
30 °/₀	71° 30′	− 0·688	0·91
40 °/₀	83° 42′	− 0·519	0·69
50 °/₀	95° 12′	− 0·339	0·45
60 °/₀	106° 30′	− 0·148	0·19

78. Cut off plates. *Constant lap. Variable travel.* In this case, the lap of the expansion valve is constant, and the cut off is varied by varying the travel of the valve in the way indicated in Article 67, Fig. 63.

Let r_1, ϕ_1 be the eccentricity and angular advance of the expansion eccentric, and r, ϕ the corresponding quantities for the main valve, as in the last article. Then the half stroke of the expansion valve is given by mr_1, where m is the ratio $d : c$. See Fig. 64. The expressions (4) and (5) of Article 76 become

$$C = mr_1 \cos\phi_1 - r\cos\phi = mE - F \text{.....}(1),$$
$$D = mr_1 \sin\phi_1 - r\sin\phi = mG - H \text{.....}(2).$$

Hence to find m so that cut off may take place at a given fraction of the stroke, calculate the corresponding value of the crank angle θ, write L for ξ, and find m from the equation

$$\pm L = (mE - F)\cos\theta - (mG - H)\sin\theta \text{.....}(3);$$

the transformation of this equation into one giving the elements of the imaginary eccentric is carried out in the same way as for the Meyer gear, Art. 76.

Digitized by Google

CHAPTER VII.

REVERSING GEARS. LINK MOTIONS.

79. Preliminary. If the crank shaft of a single cylinder double-acting engine is turned into one of the positions where the piston is at a dead point, the appropriate steam port will have a certain small breadth of opening which has already been defined as the **lead.** The motion of the piston from this dead point, along its stroke, may correspond to a motion of the crank in either of two directions, namely, clockwise or counterclockwise. In which of these two directions the crank shaft will turn continuously when steam is admitted into the cylinder will depend upon the setting of the valve gear. It is easy to decide in which direction the steam will drive an engine in any given case by trying in which direction the crank shaft must be turned to increase the breadth of the opening for steam as the piston leaves the dead point. In other words, the direction of rotation of the crank shaft which causes the lead to increase, is that in which the engine will run continuously when steam is admitted to the cylinder. A more general way of discriminating between the two directions of rotation is to place the piston at a dead point and observe which way of turning increases the distance of the valve from its central position. The direction in which the steam will turn the crank shaft is that which produces an increase of the valve displacement from its central position when the piston is moving from its dead point.

Definition. A valve gear whose setting can be readily altered so that it determines a distribution of steam by the valve which will turn the crank shaft in either of the two directions of rotation continuously is called a **reversing gear.**

80. Hand reversing. Slow speed engines which run normally in one direction, but which occasionally have to be reversed for a few revolutions, are sometimes fitted with a valve gear which only determines the turning of the shaft in the normal direction. The valve gear is designed so that it can readily be disconnected from the valve

Digitized by Google

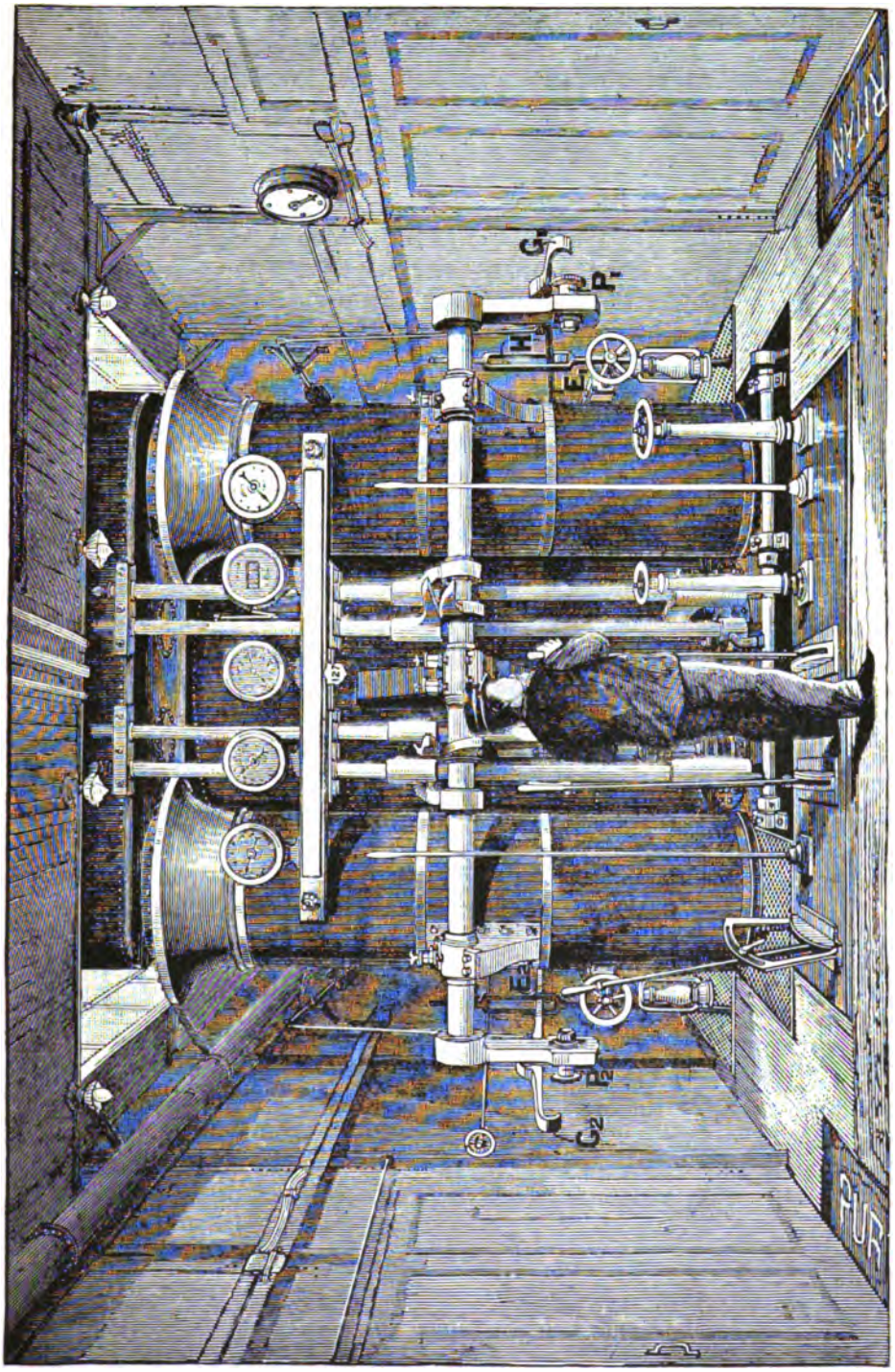

Fig. 70. HAND REVERSING. DRIVING PLATFORM OF THE S.S. "PURITAN."

Digitized by Google

spindle, and arrangements are made whereby the valve spindle can be operated by hand. The engine-driver can then cause the engine to run in the reverse direction by giving a suitable motion to the valve. The speed must be slow enough to enable the engine-driver to follow the motion of the piston, either by watching the crosshead, or by watching an indicator placed near the driving platform showing the motion of the engine crank or the piston. Usually the valve is driven through a rocking lever, the valve spindle being connected to it at one end, and the end of the eccentric rod being hooked on to a driving stud at the other end. The end of the eccentric rod can be lifted off the stud and placed so that it slides backwards and forwards without moving the lever. The valve can then be operated by hand by means of the rocking lever. This is the principle of the method of reversing in general use on the large American river steamers which are fitted with beam engines. Fig. 70 shows the driving platform of the engines of the paddle steamer "Puritan," belonging to the Fall River line, running between New York and the Fall River. The engine is of the compound condensing type and can work at the rate of 7500 horse power. Each paddle wheel is 35 feet diameter and weighs 100 tons. The beam alone weighs 42 tons. The high pressure cylinder is 75 inches diameter and 9 feet stroke, the low pressure cylinder being 110 inches diameter and 14 feet stroke. A full description of the steamer and the engines will be found in *Engineering*, January 16, 1891. The illustration is only reproduced here (by the courtesy of the editors of *Engineering*) in order to show that one of the heaviest engines in the world is worked in the reverse direction by hand after lifting the eccentric rods out of gear with their respective rocking shafts. In this case, however, the valves are actually lifted by a small supplementary engine whose action is controlled by hand levers which are seen at the centre of the driving platform Fig. 70.

The gab ends of the eccentric rods G_1 and G_2 are both shown lifted out of gear with their respective pins P_1, P_2. The mechanism by means of which the right rod is lifted off its pin and supported when out of gear is seen at H. The dial on the wall to the right shows the position of the crank and indicates to the engineer the proper time to operate the valves.

81. The loose eccentric sheave. The method of reversing by means of a loose eccentric sheave is an extension of the method of hand reversing to cases where the engine is required to run continuously in either direction.

The arrangement depends upon the fact that the crank shaft

Digitized by Google

drives the eccentric sheave so that the driving pressure, exerted by the shaft on the sheave, is transmitted through one face of the key for one direction of rotation. Thus, Fig. 71, so long as the shaft is turning in the direction indicated by the arrow, it drives the eccentric sheave through the face *AB* of the key. Suppose the part behind the face *CD* of the key to be cut away as shown, then, if the crank shaft is turned in the opposite direction, the sheave will not move until the face *CD* of the key comes into contact with the end *cd* of the curved slot, and if this length is so proportioned that in the new position of the sheave the angle between it and the crank is equal to the angular advance required for the reverse direction of running, the sheave will give a motion to the valve such that the engine will run continuously in the reverse direction. To get the crank shaft to make this small reverse angular movement whilst the sheave is at rest, the eccentric rod must be disconnected from the valve spindle and the engine reversed by hand. Immediately *CD* is in driving contact with the sheave, the eccentric rod may be dropped into connection with the valve spindle again, and the engine will continue to run in the reverse direction. Fig. 71 merely shows the principle on which the loose eccentric is

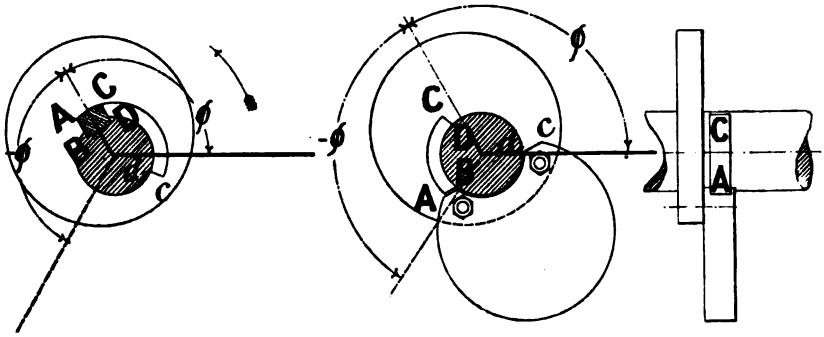

Fig. 71. **Fig. 72.**

THE LOOSE ECCENTRIC SHEAVE.

arranged. In the practical application of a loose sheave it is always desirable to add a balance weight so that the sheave will not tend to turn on the shaft by its own weight. It used to be the practice to form the driven faces on this balance weight as indicated in Fig. 72, where the weight is shown bolted to the sheave. *ACDB* is a circumferential key secured to the shaft, and it drives the sheave by contact with either of the faces *AB* and *CD*.

This method of reversing has been used extensively on the oscillating engines of paddle boats, and until quite recently could be seen on the steamers plying on the Thames. Possibly the most recent applica-

Digitized by Google

tion of this method is to be found on some compound locomotives designed by Mr F. W. Webb for the express traffic of the London and North-Western Railway Company. One of these engines, "Jeanie Deans," is described and illustrated in *Engineering*, July 25, 1890. The two high pressure cylinders of this engine drive one axle, and the valve distributing the steam to each cylinder is moved by a reversing gear of a type to be explained in a later chapter. The single low pressure cylinder drives a second axle, on which is placed a loose eccentric sheave for the purpose of operating the slide valve. The reversal of the engine is effected by the high pressure cylinders and valve gear, and a fraction of a revolution of the low pressure axle in the reverse direction brings it into contact with the sheave in the angular position necessary for continuous running in the reverse direction.

82. Reversing gears with two eccentric sheaves. An obvious way of constructing a reversing gear is to provide two eccentric sheaves, one keyed to the crank shaft at the angular advance proper for positive rotation, the other keyed at the angle for negative rotation; and to arrange the two corresponding eccentric rods so that the end of either can be coupled into driving connection with the valve spindle, whilst the end of the other, free from any connection with the valve spindle, moves idly to and fro.

Fig. 73, a diagrammatic sketch made from the model of the locomotive "Austria" in the South Kensington Museum, illustrates a form of gear used by Norris of Philadelphia in 1837.

There are two fixed eccentric sheaves, indicated by their centre lines only, keyed respectively in the positions required for positive and negative rotation. It may be noticed incidentally that the introduction of the rocking lever T, between the end of the eccentric rod and the valve spindle, requires that the eccentrics be keyed exactly 180 degrees with the positions for outside steam admission with direct connection. (See Fig. 85, below.) The end of each eccentric rod is held up by a pair of suspension links, one of each pair, S and s, being seen in the figure. These links are free to swing about the centre U, thus guiding the points E, e, of the respective eccentric rods in circular paths, whose centres are at U. For long suspension links and small angular motions the paths of the points E and e are not greatly different from straight lines. The centre, U, is at the end of an arm, forged solid with the shaft B, usually called the "weigh-bar shaft," which can be turned into either of two positions by the lever R, about the axis W, which axis is determined by bearings fixed to the engine frame. Thus, the axis U can be fixed in either of two positions at the will of the engine-

Digitized by Google

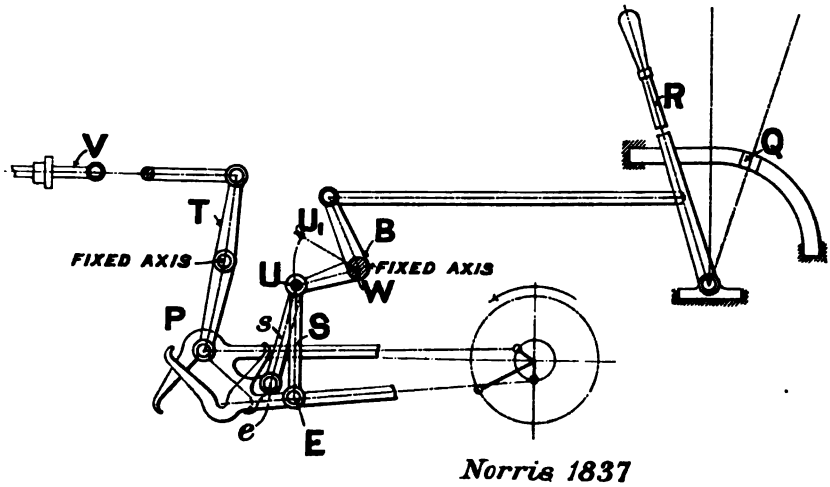

Fig. 73.

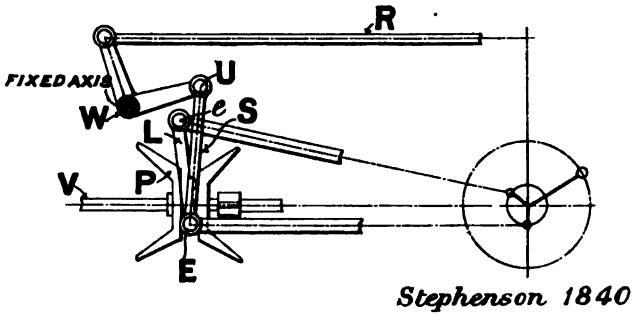

Fig. 74.

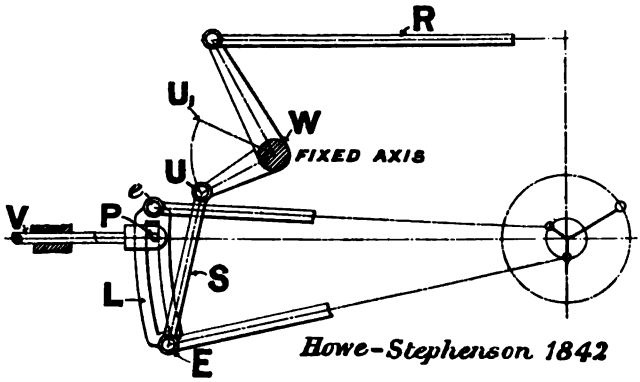

Fig. 75.

THE GENESIS OF THE LINK MOTION.

Digitized by Google

driver by means of the reversing lever R. The end of each eccentric rod is formed into a V, or gab, the bottom of which is shaped into a recess fitting the pin P round half of its circumference. The pin P is carried by one end of the rocking lever T, the other end being connected to the valve spindle V. In the figure the pin P is receiving motion from the upper eccentric rod. To reverse the motion, the lever R is disengaged from the slot holding it and pulled back into the slot Q, turning the weigh-bar shaft about the fixed centre W, so that the centre of suspension is brought to U_1, thereby lifting the upper eccentric off the pin P and bringing the lower eccentric in connection with it.

Many forms of this kind of gear were in use about this time with many variations in the mechanical details by means of which the connection of the eccentric rods to the valve spindle was controlled.

About the year 1840 Stephenson introduced the form shown in Fig. 74. Here the gabs are placed directly on the valve spindle, the ends of the eccentric rods are connected by the straight link L, and one pair of suspending links, one of which, S, is seen in the figure, serve to hold up and to guide the motion of both ends of the eccentric rods. In the figure, W is the centre of the weigh-bar shaft; U, one of the two possible centres of suspension; P, the block which receives the motion from whichever eccentric rod is in gear with it, and R the rod leading to the reversing lever on the footplate.

83. The link motion. A slight change in the mechanical arrangement of the gear shown in Fig. 75, made in 1842, resulted in a reversing gear of extraordinary fitness for locomotive working. The change, as will be seen from the figure, is merely the direct connection of the valve spindle with the link L which holds the ends of the eccentric rods apart, the link being now curved and slotted to permit one or other of the ends of the eccentric rods to be brought as nearly opposite the pin P as possible, by the turning of the weigh-bar shaft about its fixed axis W. This change is attributed to Howe, at the time a workman in Messrs Stephenson's employ at their locomotive works at Newcastle. Both figures, slightly altered to show the suspension links S distinctly, are taken from *Locomotive Engineering* by Zera Colburne. For some remarks relating to the invention of this motion, see *Link Motions and Expansion Gears* by N. P. Burg, London, 1870. The arrangement was adopted by Stephenson and the gear has since gone by the name of the Stephenson Link Motion.

This motion, in addition to being a reversing gear, is also a variable expansion gear, for if the point of suspension of the link is fixed at

Digitized by Google

some intermediate point between U and U_1, as U_2, say, the point P will receive a motion compounded of the motion of both the ends of the eccentric rods: and this compound motion is very much the same as the point would receive if it had been connected directly to an imaginary eccentric rod, driven by an imaginary eccentric sheave having a greater angular advance than either of the actual eccentric sheaves and a smaller radius: moreover it also happens that the displacement curve of the point P in this intermediate position is such, that with the same lap on the slide valve which is required for a proper distribution of steam in either of the extreme positions, a proper distribution of steam can be obtained for driving the engine with an earlier cut off, the point of cut off depending upon the position of the point of suspension U.

Thus the **link motion** was a happy solution of the problem of arranging a convenient reversing gear, and a most happy, though fortuitous, solution of the greater problem of designing a simple gear by means of which expansive working was possible. There seems to be some doubt whether this enormously valuable property of the gear was discovered at once, or whether it dawned upon the users and constructors of the gear gradually. It was however thoroughly understood in course of time and engineers found themselves in possession of one of the most beautiful mechanisms ever invented.

Once its properties were known it was carefully examined as an expansive gear and other forms proposed, varying to a greater or less degree from the original type, the most notable of these being the Gooch and the Allan types. There were several other forms brought out on the Continent, but most of them were more complex. The objects of these different inventions will be described more particularly below. It is remarkable that, at the present day, the large majority of locomotives and marine engines are fitted with the link motion, almost in its primitive form, though on the Continent the Walschaert gear, described below, seems to be displacing the link motion for locomotive work.

A modern form of the link motion is shown in Fig. 76, which represents a standard motion designed by Mr Holden for the Great Eastern Railway Co. The only practical difference between this gear and the gear of Fig. 75, is, that the suspending links S (there are two links one hiding the other) are jointed with the link at its centre Q. The point of suspension can be placed in any intermediate position between the extreme positions U and U_1 by means of the reversing screw R. The valve spindle is connected to the link by the intermediate valve rod I, sliding in guides G, having ample bearing surface. The end of the valve rod is forked, and the pin P passes through the

Digitized by Google

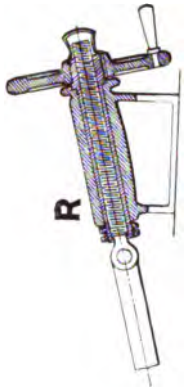

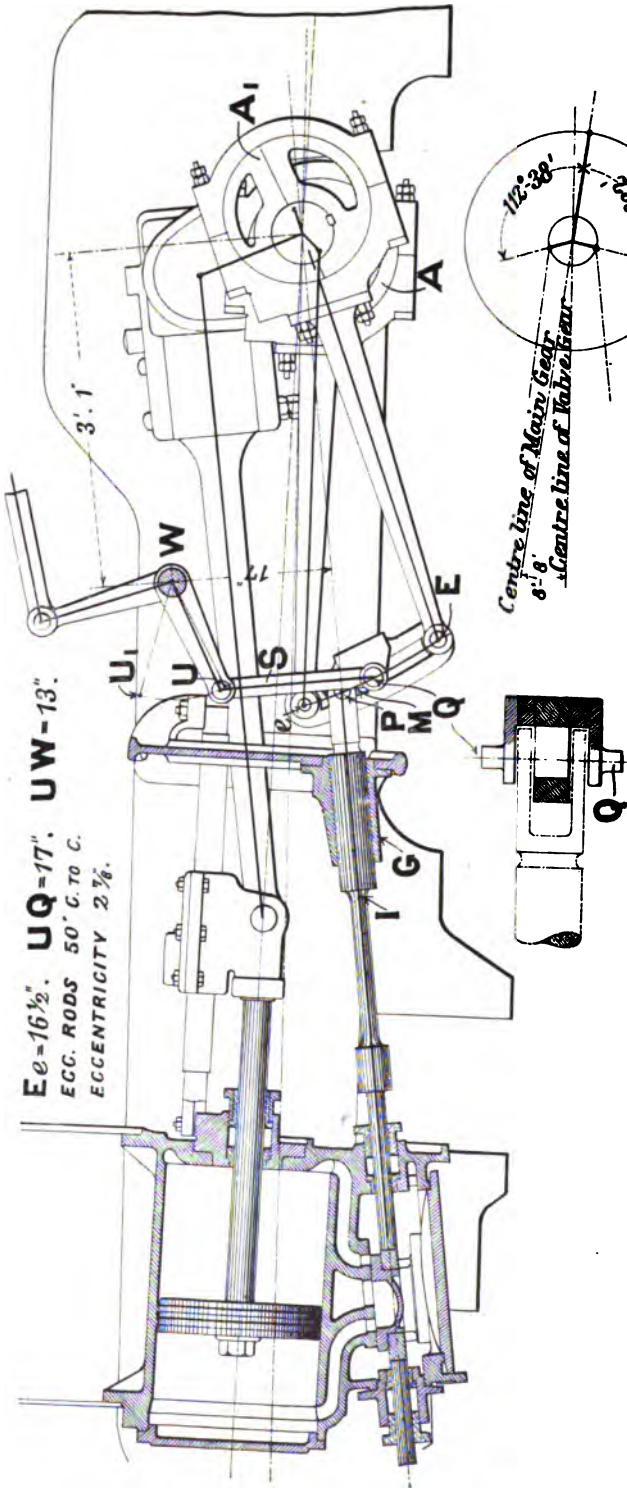

Fig. 76.

Fig. 77.

Fig. 78.

LINK MOTION. GREAT EASTERN RAILWAY.

Digitized by Google

fork and a guiding block M, called the motion block, which slides in the slot of the link. The link is shown in a position which determines positive rotation of the crank shaft, the motion given to the point e of the link by the eccentric sheave A predominating over the motion given to the point E by the sheave A_1.

The weight of the gear suspended from the point U is usually balanced by a cheese weight carried on an arm forged solid with the weigh-bar shaft. In this gear however, the weight is balanced by the effort of a spring coiled on the weigh-bar shaft.

It will be observed that when the link is moved from one extreme position to the other by the turning of the weigh-bar shaft, the axis P of the motion block must pass the axis Q, at which the link is jointed with the suspending rods S. The way the link is constructed to allow this to take place, and at the same time to ensure that the centre line of the spindle I is central with the link, is shown in Fig. 77, which is a cross section of the link through the axis Q. The two side pieces carrying the pins for the jointing of the suspension links are usually rivetted to the link itself. By this construction the link and its suspension is made symmetrical with regard to a vertical plane which contains the axis of the spindle I.

A recent American design for a locomotive link motion, for the particulars of which I am indebted to Mr McIntosh, Superintendent of Motive Power, Central Railroad of New Jersey, is shown in Figs. 79 and 80. In the general elevation the chain dotted frame is in front of the link gear, full lines only being employed at the part near the cylinder which supports the rocking lever. The end view is taken looking in the direction from the chimney towards the trailing end. The gear belongs to an engine of the Central Railroad of New Jersey and the engine is one of a number manufactured for that Company by the American Locomotive Company, Dunkirk, N.Y., who have kindly supplied the drawings. The engine is driven from a cab which is placed astride of the boiler, so that the reversing lever is attached directly to the weigh-bar shaft whose axis is W. The link is suspended from the centre U, by a single suspension rod S, which is seen better in the end elevation, and it is jointed to the centre of the link. The eccentric rods are jointed to the link at centres which are slightly displaced towards the driving axle, a construction which allows either rod to be brought in line with the centre of the motion block M, in the extreme positions. Steam is taken on the inside of the valve, so that the eccentric sheaves have to be placed as shown with regard to the main crank. The motion block, and with it the end of the intermediate rod I, is suspended from a fixed axis X, by the short link G, the pin which forms the common joint being clearly

Digitized by Google

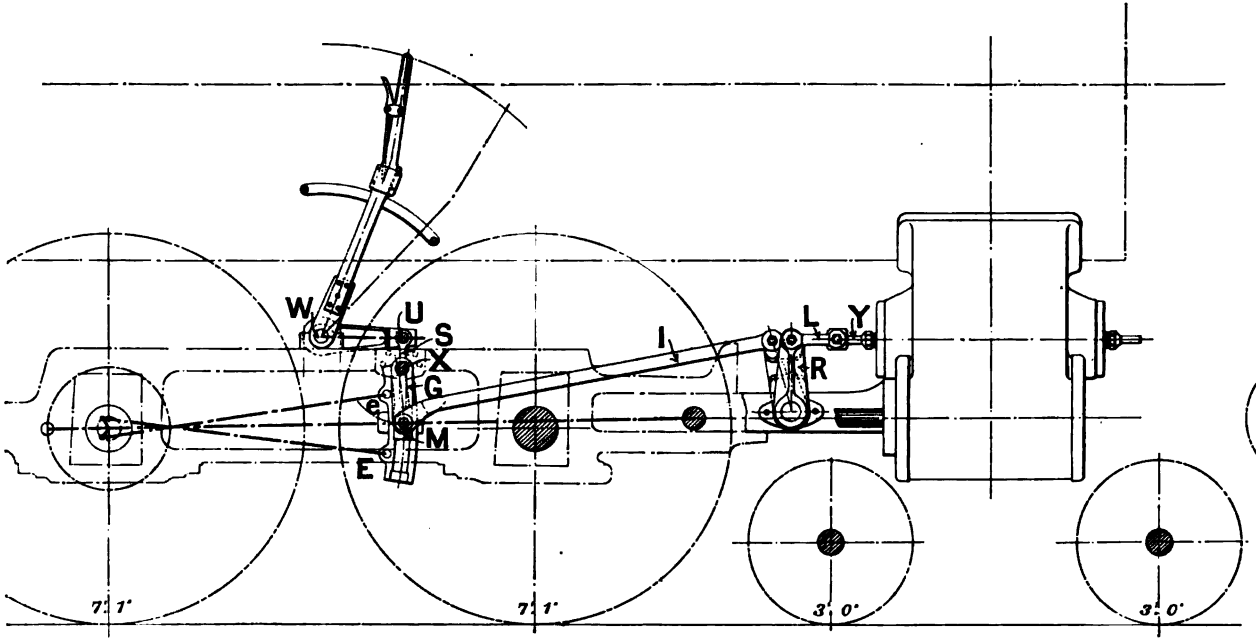

Fig. 79.

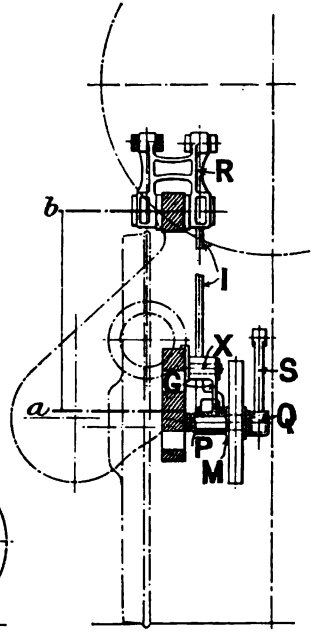

Fig. 80.

LINK MOTION. CENTRAL RAILROAD OF NEW JERSEY.

Digitized by Google

seen in the end elevation. The axis of the motion block P is therefore constrained to move in the arc of a circle whose centre is at X. The other end of the rod I is jointed to a rocking lever R. This rocker is a heavy casting of substantial design, the two arms being well ribbed together. Its end elevation is shown in Fig. 80, displaced upwards through a distance ab in order to show the parts in end elevation clearly. It is placed astride the bar frame, the fixed pins on which it rocks being bolted to the frame. The second arm is connected by a short pair of links L, to the valve spindle Y. The links G, I, and one arm of the rocker, really form a four bar chain, of which the engine frame is the fixed bar. The introduction of the rocker enables the cut off to be equalised at a given fraction of the stroke in a way similar to that explained in Article 60. The New Jersey engines of the Chautauqua class to which this gear belongs, are a powerful type. The grate area is 82 square feet, and the total heating surface is 2967 square feet of which 174 square feet are provided by the fire box. The boiler is of the wagon top kind, working at a pressure of 210 lbs. per square inch, and the barrel is telescopic, the diameter at the smoke box end being 6′ 8″. The centre line of the boiler is 9′ 8½″ above rail level, and the total length of the engine over all is 39′ 8½″. These engines are used to work the service of fast expresses between New York and Philadelphia.

Fig. 81 shows a general arrangement of a link motion fitted to a marine engine. It represents the gear for the intermediate cylinder of the port engine, looking aft, belonging to a cruiser of 22,000 horse power, built for the British Government by Messrs Humphry and Tennant. The link Ee consists of a solid bar passing through the centre of a substantial motion block M, being jointed with it by means of the pin N, which is slotted to allow the link bar to pass through it. The vertical motion of M is constrained by a single guide bar securely held by the bracket G. The motion block in this case is formed with a cross-piece at the top so that it can be connected to two valves. This method of construction is peculiar to Messrs Humphry and Tennant, the more usual way adopted by marine engine builders being to make the link up of two solid bars with distance pieces at the ends, the motion block being placed between them. The ends of the eccentric rods are forked to carry the respective ends of the link. Returning to Fig. 81, the link is suspended from the end e by the suspension link, or drag link as marine engineers sometimes call it, eU. The weigh-bar shaft, of which the cross section is seen at W, runs along the whole length of the frame and is common to the four sets of link motions belonging to the engine. In order to allow the point of suspension of each of the four link motions to be adjusted independently, the joint U

Digitized by Google

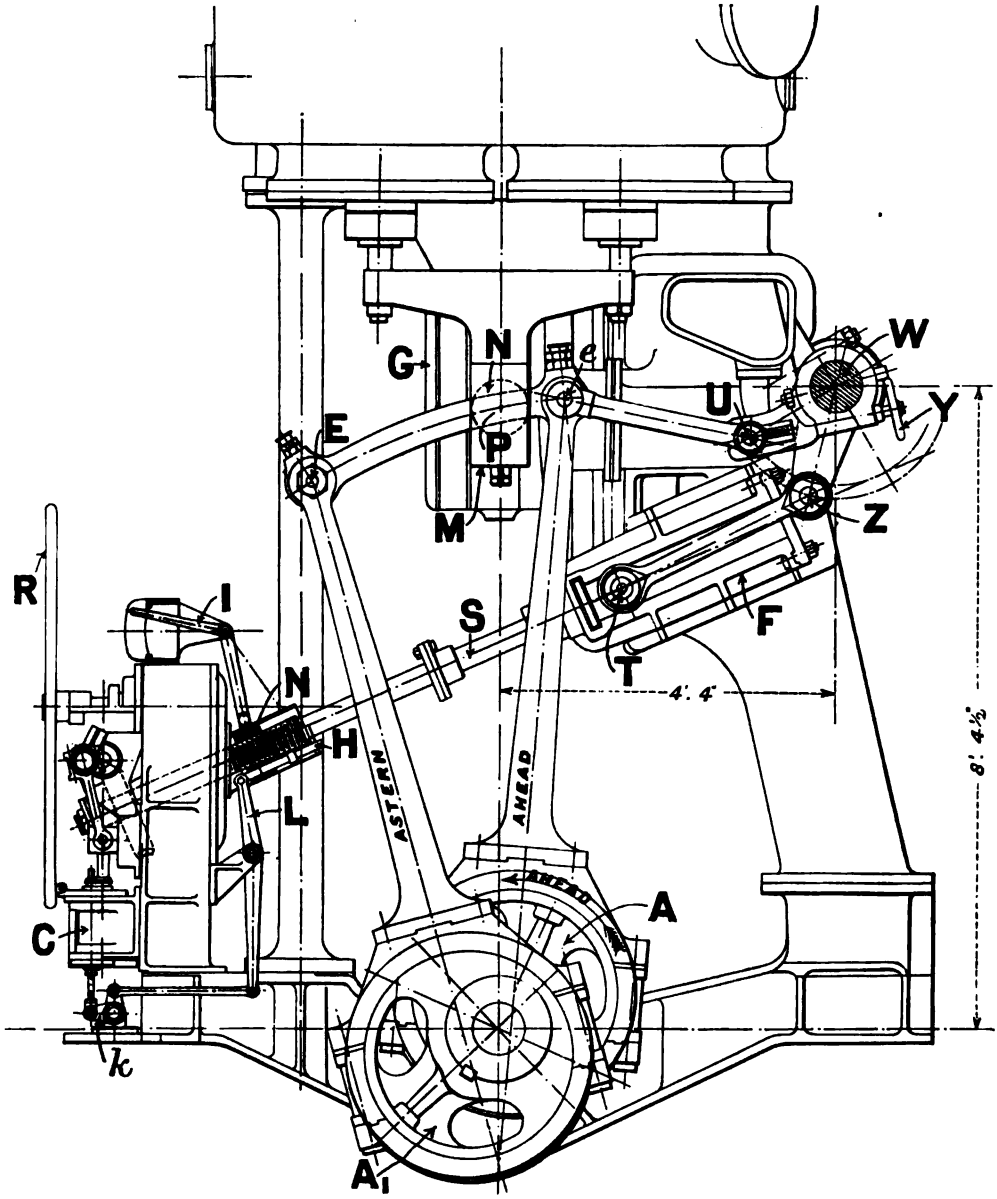

Fig. 81. Link Motion. Marine Engine.

is carried in a slot formed in the end of the arm *WU*, the arm of course being keyed to the weigh shaft. The position of *U* in the slot is controlled by the hand wheel *Y*.

Digitized by Google

The weigh shaft is operated through the lever *WZ* by means of a small steam engine shown to the left. The rotation of the crank shaft of this engine is transferred through a worm and worm-wheel to the shaft *S*, the right-hand end of which passes through, and is supported by, journals in the frame *F*, fixed to the engine standard. The part of the shaft *S* which is between the journals of the frame *F* is screwed, and engages with a nut *T* to which the frame *F* acts as a guide. The rotation of *S* therefore moves the nut, and by means of the connecting link *TZ*, turns the weigh-bar shaft. A wheel *R* is geared with the shaft *S*, so that the weigh-bar shaft may be operated by hand if necessary. The wheel *R* also acts as a flywheel to the small steam engine.

The reversing engine, which is itself reversible, is of the kind shown diagrammatically in Fig. 149 below, the principle of which is described in Article 130. After reading that article it will be understood that in addition to the slide valves used for the distribution of steam to the cylinders, a valve is required to interchange the steam with the exhaust passages when the small engine is to be reversed. This valve is indicated at *C*, Fig. 81, and is made of the piston type. It will be observed that the valve spindle from *C* projects below the cylinder, and is connected, through a bell crank lever *k*, with a lever *L*, the upper end of which is connected to a rod *H* lying parallel with the screw cut on the shaft *S*. A nut *N* on the shaft moves slowly in its guides as the shaft is turned, and in the extreme position at either end of its travel strikes a stop fixed to the rod, the distance apart of the two stops being so adjusted that when the large nut *T* has reached the end of its travel in either direction, the rod is struck through a small distance, sufficiently great however to move the valve *C* over, so that the steam and exhaust passages are interchanged.

In this way the reversing engine is automatically reversible. Hence when steam is turned into it, the effect is, that the nut *T* moves backwards and forwards in the guides *F*, thereby swinging the link continuously from the full ahead to the full astern position and back again, thus allowing steam to pass continuously through the main engines without driving them continuously in the same direction. The crank shaft merely makes oscillations; the engine is ready however to be started away at full speed ahead immediately the order is given, because to do this it is only necessary to stop the reversing engine when the link is in the proper position. An index *I* attached to the nut *N* shows the position of the link, and may of course be graduated to give the cut off in the cylinder.

84. The general angular positions of the eccentric sheaves. The introduction of a rocking shaft reverses, or does not reverse, the

Digitized by Google

phase of the motion of the valve with regard to the piston, according as the arms of the rocker are on the opposite, or on the same, side as the axis of the shaft. Again, the phase may be reversed by taking steam on the inside of the valve. The following diagrams show the general arrangement of the gear in various cases. In these diagrams the observer is supposed to stand facing the engine with the cylinder on his left, and the crank shaft on his right, and the crank is on the 0 degree dead point, that is, the piston is on the dead point where it is just going to begin the instroke.

Fig. 82 shows the normal case for English locomotives where steam is taken on the outside of the valve and the centre of the motion block is jointed directly to a continuation of the valve spindle.

Fig. 83 shows the case when inside admission is used, a method sometimes adopted with piston valves, because then the high pressure steam is kept away from the glands of the steam chest. Here the forward eccentric sheave is set with a lag λ_1 and the backward with a lag λ_2.

If a rocking shaft is introduced into the gear of the kind shown in Fig. 79 the eccentrics should be set in the same way as in the two previous cases. If, however, the arms are on opposite sides of the axis, the settings corresponding respectively to inside and outside admission are shown in Figs. 84 and 85.

In all these cases the upper half of the link is used for positive rotation (forward running), and this necessitates the crossing of the rods in the two cases where the eccentrics are set with lag.

85. Examination of the distribution of steam effected by a link motion. To examine the distribution of steam effected by a link motion, displacement curves of the valve must first be obtained for different positions of the point of suspension, U, either by drawing or by means of a model of the gear. Each position of the point of suspension is determined by the angular position in which the weigh-bar shaft is locked by the reversing lever, reversing wheel, or reversing engine. The point P, Fig. 76, is rigidly connected to the valve, so that a displacement curve for P is the same as a displacement curve for the centre of the valve. Having obtained a set of displacement curves, the common vertical axis of the system may be fixed so that the respective leads for the two cycles are equal for a particular curve. Then add the lap lines and the piston displacement curve, and the valve diagram is complete.

86. Definition of u. A convenient way to distinguish between a set of displacement curves is to mark them with the numerical value of

Digitized by Google

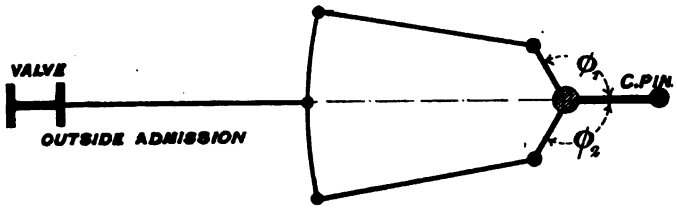

Fig. 82.

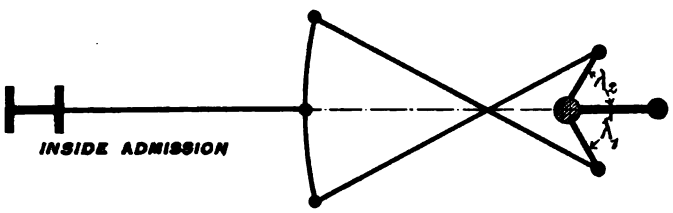

Fig. 83.

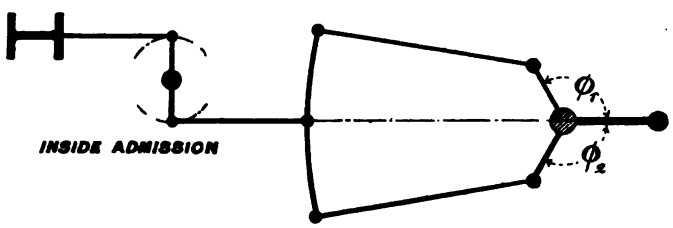

Fig. 84.

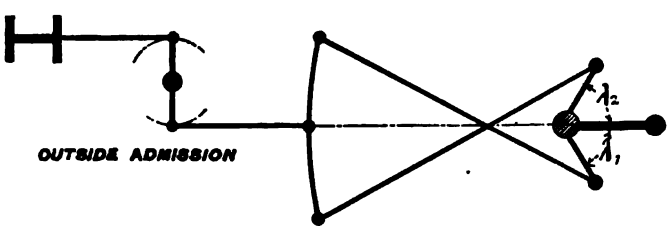

Fig. 85.

LINK MOTIONS. ANGULAR POSITIONS OF THE ECCENTRIC SHEAVES IN VARIOUS ARRANGEMENTS.

Digitized by Google

the quantity which will always be denoted by u. This quantity is the distance at which P, the centre of the motion block, stands from Q, the centre of the link when the crank is at 0 degrees, that is to say, when the piston is on the dead point at the beginning of the instroke cycle. Moreover, since the block may stand above or below the centre of the link, let $+u$ denote a distance measured above the centre Q, and $-u$ a distance measured below the centre Q. When the motion block is at the centre of the link, P coincides with Q and u has the value zero. In these circumstances the link motion is said to be in "mid-gear."

87. Valve displacement curves of the Great Eastern Railway link motion illustrated in Fig. 76. In this gear it will be noticed that the line of stroke of the piston is inclined to the line of stroke of the valve. As explained in Article 61, to find the angular difference between the crank and eccentric sheaves to be used in drawing the diagram, the two centre lines are to be brought into coincidence. In this example, Fig. 78, the angle between the centre lines is approximately eight degrees. When the centre lines are brought into coincidence the actual angular advance of the positive eccentric sheave (forward), namely $112\frac{1}{2}$ degrees, will be diminished to $104\frac{1}{2}$ degrees, and the actual angular advance of the negative sheave (backward) will be increased to $104\frac{1}{2}$ degrees. Thus, in working out the distribution effected by this gear, equal positive and negative angular advances are to be used.

Displacement curves of the point P are shown in Fig. 86 for the following values of u,

$$4\tfrac{1}{2}'' \qquad 3'' \qquad 1\tfrac{1}{2}'' \qquad 0 \qquad -1\tfrac{1}{2}'' \qquad -3'' \qquad -4\tfrac{1}{2}''.$$

The centre line is placed to bisect the horizontal distance between the points where the $4\frac{1}{2}''$ displacement curve cuts the horizontals through 0 and 180 degrees. The steam laps are each equal to $\frac{7}{8}$ inch, so that the lap lines are drawn $\frac{7}{8}$ inch respectively to the right and left of the central line. The exhaust lap is zero for both cycles, hence the intersections of the central line with the displacement curves determine the different release and compression points. Observe, that the displacements of the valve are now measured from a centre line which is common to the whole family of curves, but which does not correspond with the centre of oscillation of any one of them. If, therefore, the laps of the valve were measured according to the instructions of Article 47, namely, with reference to the centre of oscillation, they would be unequal for any one displacement curve; and this inequality would be different for different displacement curves. It is more con-

Digitized by Google

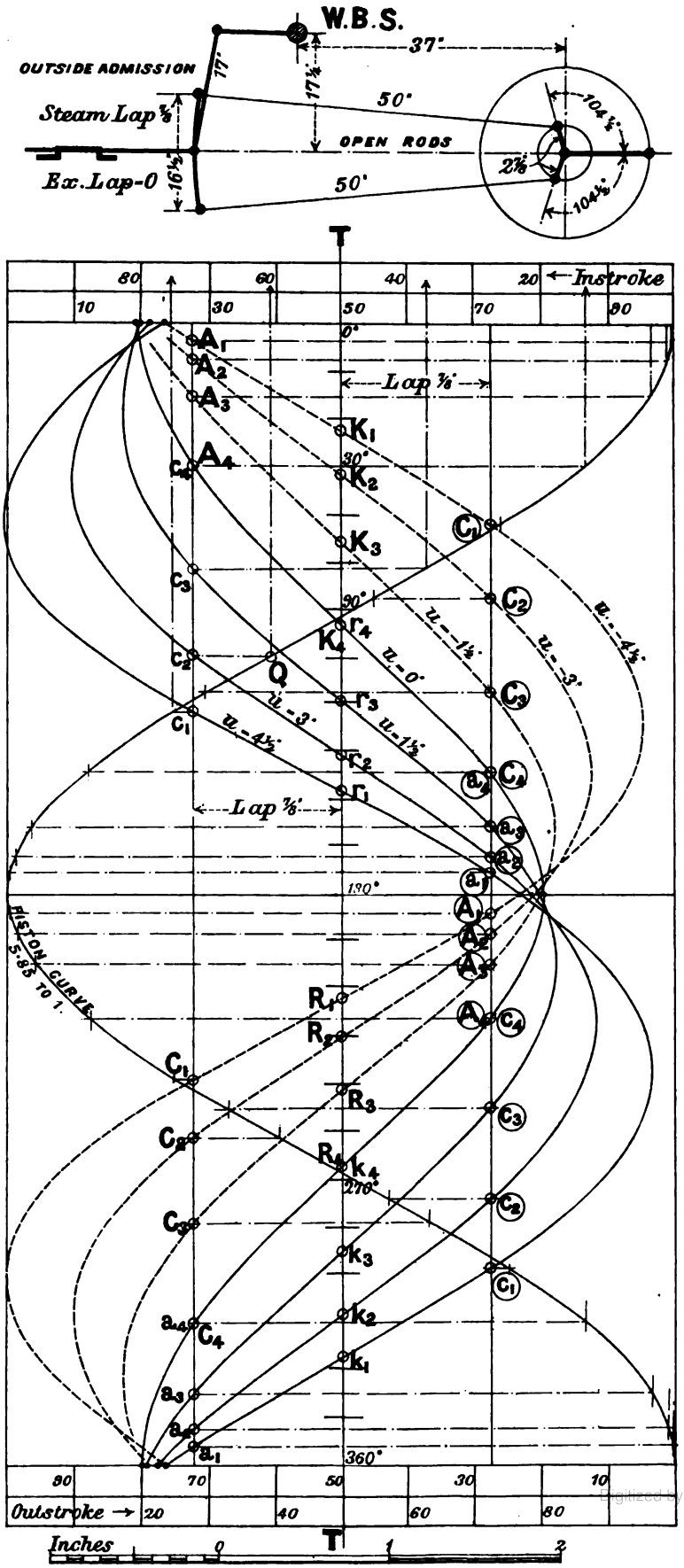

Fig. 86. Valve Diagram for the Link Motion illustrated in Fig. 76. Open Rods. Outside Admission.

Digitized by Google

venient to fix a common vertical axis in the way shown in the figure, and to consider that the valve has equal laps for the two cycles, than to refer the laps to a line drawn through the centre of oscillation belonging to each displacement curve.

The connection rod is 5·85 times the length of the crank, and the corresponding piston displacement curve is shown on the diagram.

A careful examination of this valve diagram will place the student in possession of the chief characteristics of the distribution of steam effected by the link motion.

First, fix the attention on the displacement curve marked $u = 4\frac{1}{2}''$. In general shape it is like the curves already considered in connection with the simple eccentric gear. Running the eye down it, starting from the zero position of the crank, it will be observed that the lead is 0·17 inch, and that cut off, release, compression, and admission are respectively determined for the instroke cycle by the points

$$c_1,\ r_1,\ k_1,\ a_1.$$

Referring these points to the piston curve and from thence to the percentage scale, it will be found that the distribution of steam corresponding to the position of the point of suspension U, which makes $u = 4\frac{1}{2}''$, is

Cut off, 75 per cent.
Release, 91 per cent.
Compression, 92 per cent.
Admission, 99 per cent.
Maximum opening for steam, 1·12″.
Maximum opening for exhaust, 1·82″.

These figures are tabulated in the top line of Table 7. Next, look at the curve marked $u = 3''$. The lead has increased slightly, and the events of the stroke are determined by the points

$$c_2,\ r_2,\ k_2,\ a_2,$$

the percentages corresponding to which are shown in the second line of the table.

When $u = 1\frac{1}{2}''$ the lead has again increased, and now the points

$$c_3,\ r_3,\ k_3,\ a_3$$

fix the distribution.

Examine next the curve marked $u = -4\frac{1}{2}''$. Starting from the top of the diagram and running the eye down, it will be seen that the opening for steam on the dead point 0 degrees is equal to the lead

Digitized by Google

when $u = +4\frac{1}{2}''$, but that as the crank angle increases positively, the displacement curve almost immediately crosses the lap line, showing a cut off at A_1. From this point no steam can get into the cylinder until the curve reaches C_1, but then the pressure is acting to oppose the motion of the piston. It is evident, therefore, that the distribution is such, that the engine cannot be driven by the steam in the positive direction. But now start from the 360 degrees crank position and run the eye upwards along the curve. The lead is 0·17 and the points

$$C_1,\ R_1,\ K_1,\ A_1$$

determine a distribution which is practically the same as that determined by the displacement curve $u = +4\frac{1}{2}''$, providing the crank angle be reckoned from 360 backwards up to 0 degrees, that is providing the crank turns in the negative direction. Thus, when steam is admitted to the cylinder, the crank shaft will turn in the negative direction. Similar considerations apply to the curves $u = -3''$ and $u = -1\frac{1}{2}''$.

Consider the curve corresponding to $u = 0$. Starting from the zero position of the crank and running the eye downwards, it will be found that the lead has a maximum value, and that cut off takes place very early, namely at 13 per cent. of the stroke. Release occurs at 52 per cent. and compression at 52 per cent. of the return stroke. Again, starting from the crank angle 360 degrees and working upwards along the curve, it will be found that the distribution effected is to all intents and purposes the same as found from 0 as the starting point. That is to say, the distribution is such that it is equally able to drive the engine in the positive or the negative direction, if it can drive the engine at all. If the cut off at mid-gear is not excessively early, there may be enough positive work done during the stroke to overcome a light load, such as the engine friction. For instance, a locomotive running light and in the forward direction, may continue to run forward when the link motion is brought into mid-gear. If the engine be reversed it may continue to run backwards when the link motion is brought into mid-gear as before. Thus, for this one position of the gear, the engine may be running either forwards or backwards.

For the outstroke cycle, start the consideration of the displacement curves marked with positive values of u from 180 degrees, and work downwards. For the displacement curves marked with negative values of u, start also from 180 degrees, but work upwards. All the points giving the distribution of the outstroke cycle are similarly lettered to those of the instroke cycle, but are distinguished by having a circle drawn round the letters.

Digitized by Google

The results for both cycles and for the seven values of u stated, are collected together in Table 7. Each horizontal line of this table corresponds to one definite indicator diagram. For positive values of u the crank shaft will rotate in the positive direction, and for negative values in the negative direction.

The transference of all the points concerned, to the piston curve horizontally, and then to the percentage scales vertically, is somewhat tedious. The labour may be considerably reduced by the use of one of Zeiss' glass scales for the percentage scale, guiding it over the diagram by the T-square. For instance the cut off point c_2, projected horizontally on the piston curve, gives the point Q. Placing a glass scale, which is divided into 100 parts, across the diagram, its centre corresponding with the centre line and its extremities with the vertical boundaries of the piston curve, the percentage position of Q can be read off with reference to either dead point at will.

The maximum openings of the ports for steam and exhaust can easily be read off the diagram. Comparing these, it will be seen that there is considerable variation between the maxima for a given curve. In other words, the centres of oscillation of the several curves do not fall upon the centre line of the diagram. This is one of the defects of the link motion, and nothing can be done to remedy it without changing the type of the gear altogether. It is not a serious error practically. The drawing of the centre line to give equal leads corresponds with that method of setting of the valve where the valve spindle is adjusted in length until this equality of lead is secured.

It will be observed that the displacement curves (shown in full lines) relating to forward running, intersect one another approximately at a point just below the horizontal through 0 degrees. If a horizontal is drawn through the point corresponding to 5 degrees on the vertical axis, it will pass through this common intersection of the curves. If therefore the zero of the vertical scale could be moved down 5 degrees, the leads for varying positive values of u, could be made more nearly equal. This may be accomplished by increasing the angular advance of the forward eccentric sheave 5 degrees, at the same time decreasing the angular advance of the backward sheave by an equal amount, so that the angle between the sheaves themselves remains unchanged. The leads at the 180° dead point would also be equalised by this change. Hence, by setting the eccentric sheaves with slightly different angular advances, the leads may be approximately equalised for varying positive values of u. The leads for back gear, however, suffer by the change, the original inequalities between them being increased for varying negative

Digitized by Google

values of u. This method of setting the sheaves was pointed out by Zeuner in his Treatise on *Valve Gears*, it is however rarely employed.

The chief characteristics of the link motion may now be summarised:

(1) The lead of the valve is not constant for all positions of the suspending point U. It increases from full gear, where u has a minimum positive or negative value, to a maximum at mid-gear, where $u = 0$. In the diagram it will be seen that the lead increases from 0·17″ at full gear to 0·31″ at mid-gear.

(2) The cut off takes place earlier in the stroke as u is decreased, being a minimum when $u = 0$.

(3) Release takes place earlier in the stroke as u is decreased.

(4) Compression takes place earlier in the return stroke as u is decreased.

(5) Admission takes place earlier as u is decreased.

(6) The centre of oscillation of the valve changes as u changes. This is shown on the diagram by the unequal openings of the ports both for steam and exhaust.

It may be stated with reference to locomotive working that, in general, all the events of the stroke require to take place earlier as the piston speed is increased. Bearing this in mind it would be difficult to devise a more appropriate mechanism than the link motion for a locomotive gear. All the exacting conditions of the service are, if not exactly fulfilled, very nearly complied with. It is remarkable that the characteristics of the link motion which make it so valuable were, if tradition be true, unknown alike to the inventor and to the engineers who first used it, and that its subtler properties were only discovered in the use of it as a reversing motion.

88. Percentage and port opening diagrams. Having obtained a sufficient number of displacement curves, it is an easy matter to construct diagrams from which the distribution of steam and the port openings may be found for any assigned value of u. Such diagrams are shown in Figs. 87 and 88 for the Great Eastern Railway link motion. In Fig. 87 the percentages given in Table 7 are plotted vertically over the corresponding values of u set out horizontally, and curves are drawn through the points so obtained. Hence for a given value of u, positive or negative, the corresponding distribution of steam is fixed by the points where a vertical line through the given value of u, cuts the curves. The port openings are plotted in a similar manner in Fig. 88.

Digitized by Google

TABLE 7.

Link motion. Great Eastern Railway.

The letters on the diagrams have the following significance.

Instroke cycle. Positive rotation. (*Forward.*)
a=admission, c=cut off, r=release, k=compression.

Negative rotation. (*Backward.*)
A=admission, C=cut off, R=release, K=compression.

Outstroke cycle. The same as above only with rings round them.

INSTROKE CYCLE. (Back port.)

u	Cut off %	Release %	Compression %	Admission %	Lead in inches	Maximum opening, steam	Maximum opening, exhaust
+ 4½″	75·3	91	92·3	99·7	0·17″	1·12″	1·82″
+ 3″	60·5	84·7	85·0	99·0	0·25″	0·71″	1·50″
+ 1½″	37·1	73·2	70·5	96·5	0·29″	0·41″	1·26″
0	13·4	52·5	48·5	86·5	0·31″	0·31″	1·19″
0	13·2	51	47·5	86·5	0·31″	0·31″	1·19″
− 1½″	37·0	72·0	69·5	96·5	0·29″	0·41″	1·26″
− 3″	59·5	84·0	85·0	99·0	0·25″	0·70″	1·47″
− 4½″	75·0	91·0	92·5	99·7	0·17″	1·10″	1·77″

OUTSTROKE CYCLE. (Front port.)

+ 4½″	72·3	92·3	91·0	99·7	0·17″	0·95″	1·99″
+ 3″	57·1	85·0	84·7	98·8	0·25″	0·63″	1·58″
+ 1½″	33·1	70·5	73·2	96·2	0·29″	0·39″	1·28″
0	12·5	48·5	52·5	88·0	0·31″	0·31″	1·19″
0	12·0	47·5	51·0	87·5	0·31″	0·31″	1·19″
− 1½″	29·5	69·5	72·0	95·5	0·29″	0·39″	1·28″
− 3″	54·9	85·0	84·0	98·3	0·25″	0·60″	1·57″
− 4½″	74·0	92·5	91·0	99·7	0·17″	0·90″	1·97″

The release points $r_1 r_2 r_3 r_4$ become the compression points for the Outstroke Cycle.

The compression points $k_1 k_2 k_3 k_4$ become the release points for the Outstroke Cycle.

The release points $R_1 R_2 R_3 R_4$ become the compression points for the Outstroke Cycle.

The compression points $K_1 K_2 K_3 K_4$ become the release points for the Outstroke Cycle.

Digitized by Google

Fig. 87.

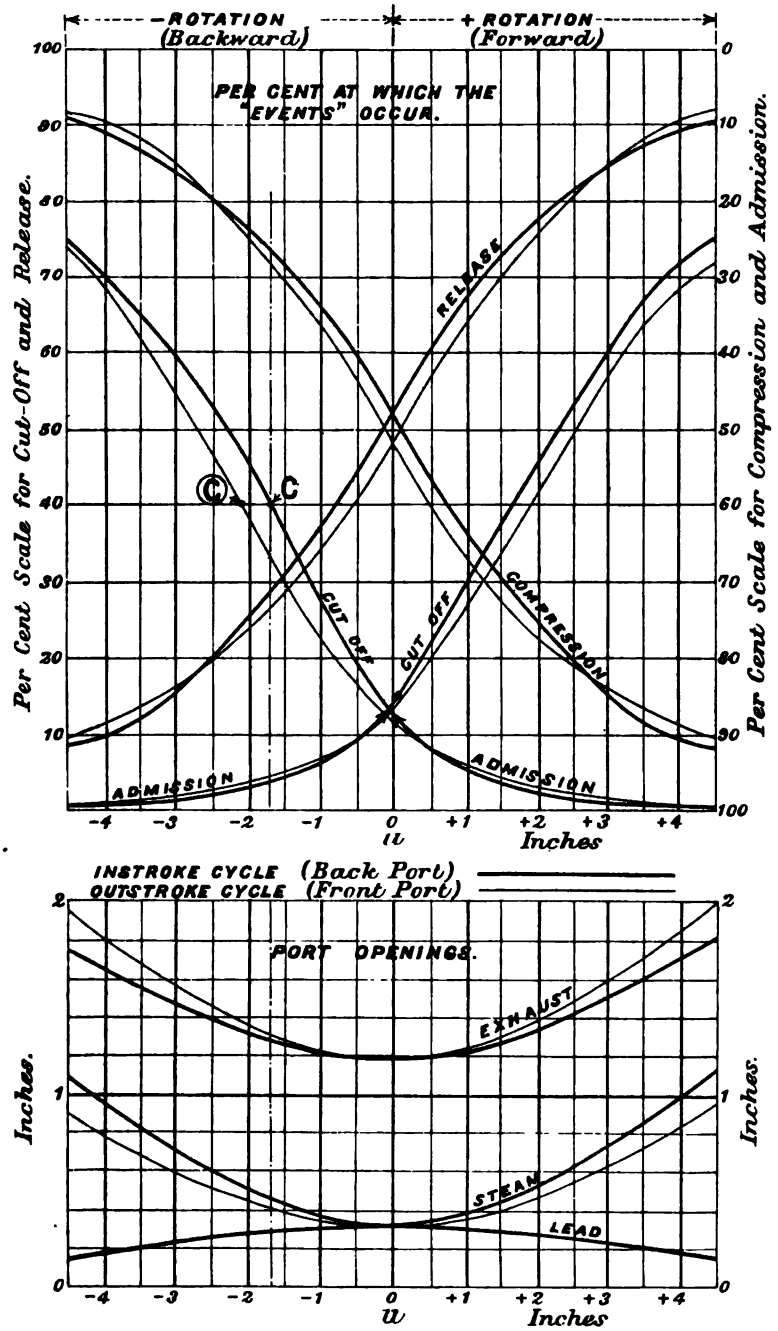

Fig. 88. Percentage and Port Opening Diagrams corresponding to Table 7.

Digitized by Google

The diagram may be used to find the value of u corresponding to a given cut off. For instance, suppose the value of u and the distribution of steam to be required when the cut off is 40 per cent. of the stroke, instroke cycle, in back gear. The point C fixes the place on the instroke cycle backward gear curve where the cut off is 40 per cent. A vertical through this point shows that u must be $-1{\cdot}7$ inches, and that release, compression and admission occur respectively at 74, 71, and 96½ per cent. of the stroke. Continuing the line through to the port opening diagram below, the corresponding lead, and port openings have the values 0·28″, 0·45″ for steam, and 1·28″ for exhaust. The quantities for the outstroke cycle can similarly be read off. If the 40 per cent. had been given with reference to the outstroke cycle a vertical through Ⓒ would have fixed the different percentages and port openings.

The displacement curves in Fig. 86 are sensibly influenced by small changes in the position of the weigh-bar shaft as will be understood from Article 99 below, where it is shown how to choose the position of the shaft to equalise the cut off at a given fraction of the stroke in both forward and backward gears. There will therefore be slight changes in the shape of the curves Figs. 87 and 88, corresponding with the changes in the shape of the displacement curves.

The curves, Figs. 87 and 88, also depend upon the setting of the valve gear. In these figures they correspond to the setting where the length of the valve spindle is adjusted to give equality of lead for $u = 4\frac{1}{2}''$, and this corresponds with the position of the common vertical axis TT, in Fig. 86. A slight change in the length of the valve spindle would require a corresponding lateral change to be made in the position of the axis TT, relatively to the valve displacement curves, but the piston displacement curve and its attendant percentage scales would move with the axis. The leads, port openings, and the percentages of all the events given by the diagram would change slightly, and there would be consequent modifications of the shapes of the curves in Figs. 87 and 88. A point peculiar to link motions used with locomotives is, that on service the vertical distance between the centre of the weigh-bar shaft and the centre of the crank axle is always changing, because the weigh-bar shaft, and in fact the greater part of the valve gear, is carried by the spring supported frames of the engine, whilst the centre line of the crank axle is at an invariable distance from the rail level. When the engine is unloaded, as is the case when the valves are set in the erecting shop, it stands high on the springs, but when loaded for service it settles down on the springs. If therefore the valves are set in the erecting shop to give exact equality of lead at mid-stroke, or at full gear, the engine being unloaded, when the engine is loaded for

Digitized by Google

service this equality would be destroyed, and the curves corresponding to those of Figs. 87 and 88 would be slightly modified. The changes are greater if the axis of the valve gear is inclined to the line of stroke. Also the expansion of the valve spindles when heated by the steam tends to decrease the lead at the front port and increase it at the back port. All these facts must be borne in mind when setting the valves and duly allowed for by so setting the valves in the unloaded and cold condition of the engine that in the average loaded and hot condition there is equality of lead at, say, full forward gear. One of the advantages of the link motion, including the modifications of it described below, is that the vertical movement of the spring supported part of the gear relatively to the crank axle, does not seriously interfere with the distribution of the steam or with the leads, and although curves like those of Figs. 87 and 88, which correspond to one setting of the gear, are modified in shape, yet the modification is slight.

It is to be understood then that the curves in Figs. 87 and 88 only represent conditions corresponding to the position of the weigh-bar shaft, and to the position of the axis *TT*, shown in Fig. 86.

89. Link motion with crossed rods. An alternative way of connecting the eccentric rods to the link is shown in the diagrammatic sketch at the top of Fig. 89, forming what is called a link motion with crossed rods. In order to ascertain to which of the two types a particular link motion belongs, turn the crank into the position where both eccentric radii are pointing towards the link. If the rods are uncrossed in this position the motion belongs to the open rod type, if crossed, to the crossed rod type.

The peculiarities of the distribution of steam determined by a link motion of the crossed rod type may be studied from the displacement curves shown in Fig. 89, which were constructed from the Great Eastern Railway gear just considered after crossing the rods, everything else remaining the same.

Comparing the valve diagram with that for the same gear with open rods, Fig. 86, notice

(1) The value of u is now negative for positive rotation and positive for negative rotation.

(2) The lead decreases as u is decreased, being a minimum in mid-gear.

(3) The displacement at the dead points is reduced so much

Digitized by Google

that the lap must be reduced to $\frac{1}{4}$ inch in order to get sufficient lead for the full gear curves, whilst for mid-gear, even with this reduced lap, the lead is nil.

(4) The percentages at which the events of the stroke occur for corresponding values of u in the two valve diagrams are considerably altered.

(5) The travel of the valve is reduced.

This comparison of the two diagrams will indicate that to get a workable motion giving a distribution of steam comparable with the open rod type, appropriate increases must be made both in the eccentric radii and in the angular advances.

It should be understood that the valve diagram for the crossed rods, Fig. 89, does not represent an actual case. It is obtained from the Great Eastern Railway motion, which was designed for open rods, by crossing the rods without altering any of the other quantities except the lap, the object being to bring out the peculiarities of the types by contrasting the distributions of steam they respectively determine, when the only difference between them is that the one has open rods, the other crossed rods. Crossed rod motions may be designed to give equally good distributions of steam for various values of u as open rod motions.

The distinguishing characteristic of the crossed rod type is that the lead decreases as the motion is brought towards mid-gear, being a minimum at mid-gear.

90. Valve displacement curves of the Great Eastern Railway link motion, arranged for inside steam admission. A reference to Article 42 will recall the statement that if a simple valve gear is designed for outside steam admission having an angular advance ϕ, then it may be set for inside steam admission by merely altering the angular advance to an angular lag λ such that

$$\lambda = (180 - \phi) \text{ degrees.}$$

This principle remains true for a Stephenson link motion. Consequently if the angular advance of $104\frac{1}{2}$ degrees is changed to an angular lag of $75\frac{1}{2}$ degrees the displacement curves of the valve will be such that steam requires to be admitted on the inside edge and released at the outside edge of the valve, the steam pipe and exhaust pipe being of course interchanged. This arrangement may be, and is

Digitized by Google

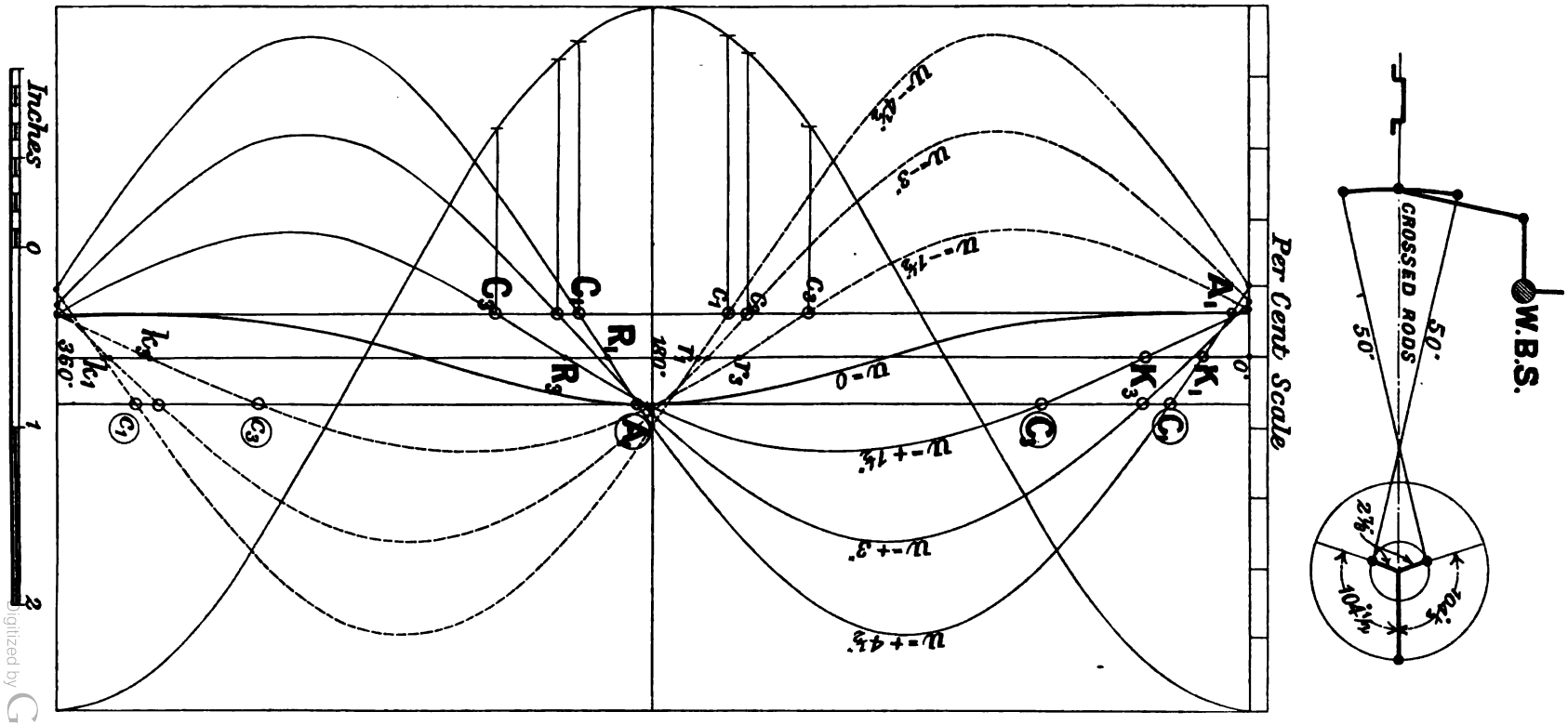

Fig. 89. Valve Diagram. Crossed Rods. Outside Admission.

Digitized by Google

sometimes, adopted with piston valves, because the high-pressure steam inside the valve has no tendency to blow the valve off the face of the ports, as would be the case with the ordinary slide valve.

A set of curves corresponding to angular lags of 75½ degrees for both the forward and the backward eccentric sheave, is shown in Fig. 90, and with the exception of the change in the angular advance, the other dimensions of the gear remain the same as those shown on the skeleton diagram above the displacement curves for outside steam admission, Fig. 86.

Looking at the skeleton drawing above Fig. 90, it will be noticed at once that the change from angular advance to angular lag results in the crossing of the eccentric rods, but an examination of the corresponding displacement curves will show that the lead increases as the link is moved from full gear towards the mid position. The reason is, that although the crossing of the rods results in a slight increase of the distance of the valve from its central position as the link is brought towards mid-gear, as in the case of the gear with angular advance and crossed rods, yet this increased distance corresponds to an increased lead because the lap is set out on the inside of the valve. The eccentric rods may of course be connected to the link so that they are "open," in which case the upper part of the link determines negative rotation, and the lead decreases from a maximum at full gear to a minimum at mid-gear.

Returning to the valve displacement diagram, Fig. 90, the full curves are those for positive rotation, or forward running, and the dotted curves for negative rotation or backward running. The events of the stroke for the instroke cycle, when $u = +4\frac{1}{2}$ inches, are indicated by the letters

$$c_1,\ r_1,\ k_1,\ a_1,$$

and, remembering that r_1 is the same point as k_1, and k_1 as r_1, the corresponding events for the outstroke cycle, by the letters

$$c_1,\ k_1,\ r_1,\ a_1.$$

Referring these points to the piston curve, and from thence to the appropriate percentage scale, it will be found that the instroke cycle is specified by

Admission	99·7	per cent.
Cut off	69½	" "
Release	90	" "
Compression	93	" "

Digitized by Google

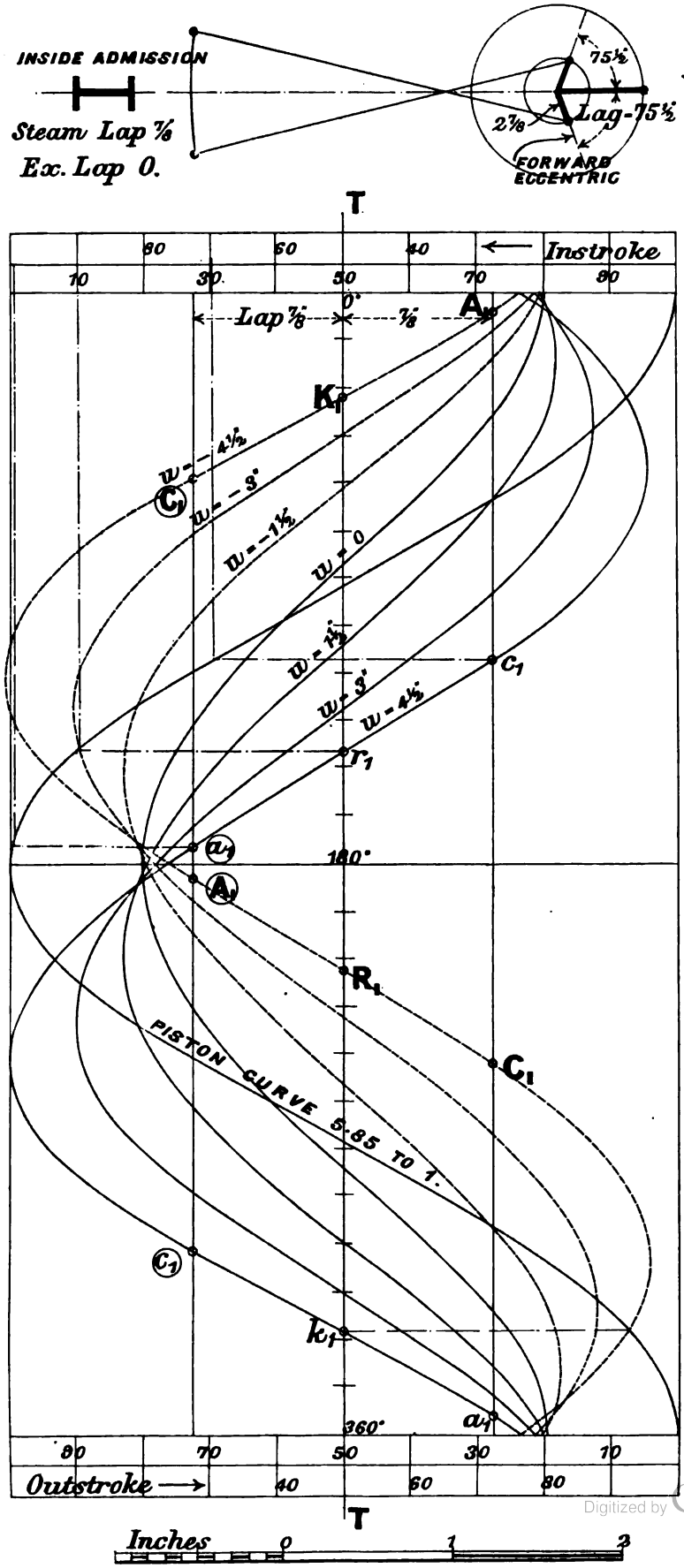

Fig. 90. Valve Diagram. Crossed Rods. Inside Admission.

Digitized by Google

and the outstroke cycle by

Admission	99·7	per cent.
Cut off	78	„ „
Release	93	„ „
Compression	90	„ „

Comparing these figures with those for inside admission, Table 7, it will be seen that there is substantial agreement between them. The differences are due to the several obliquities of the rods influencing the results in different ways. No difficulty will be found in constructing a table corresponding to Table 7 from the diagram. The points determining the instroke cycle for the value of $u = -4\frac{1}{2}$ inches are shown by

$$C_1,\ R_1,\ K_1,\ A_1,$$

the points for the outstroke circle being ringed.

A set of displacement curves for angular lag and open rods would be generally similar in character to those of Fig. 90, but the full curves would be dotted and the dotted curves full.

91. To draw the valve displacement curves of a Stephenson link motion. The only correct way to obtain the displacement curve corresponding to a given value of u, is to set out the link motion in a series of positions, 24 say, obtaining thereby a series of corresponding values of the valve displacement and the crank angle. Plot these values and draw a curve through the points so obtained. The method is most easily explained in the form of the following problem.

Problem. Given the dimensions of a link motion, the position of the point of suspension of the link, and the crank angle, θ; find the position of the link.

(1) Set out the crank at the given angle θ, Fig. 91; measure from it the two given angular advances ϕ_1 and ϕ_2, and fix the centres a and b of the ends of the eccentric radii.

(2) From a and b respectively as centres, and with a radius equal to the length of the eccentric rod, draw the arcs e_1e_2, and E_1E_2. Then the end centres of the link must lie respectively on these two arcs. Set out W, the centre of the weigh-bar shaft, and the given position of the point of suspension U.

(3) From U as centre, with a radius equal to the length of the suspension link, draw the arc C_1C_2. Then the point of attachment of the link to the suspension link must lie on this curve.

Digitized by Google

Thus, the three centres of the link must lie severally on these respective arcs.

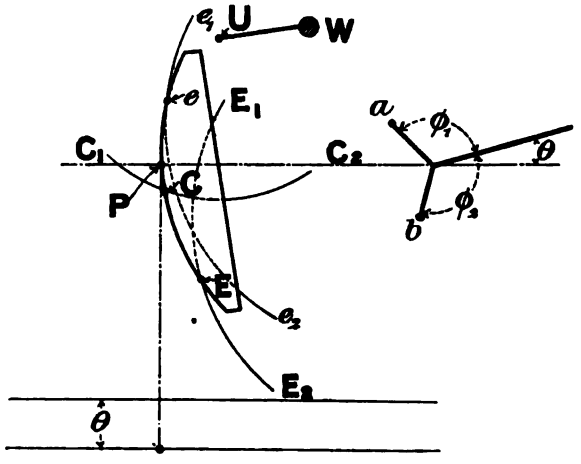

Fig. 91. The Determination of a Link Position by "fitting" a Template to three Arcs.

(4) Make a template, curved to the radius of the link (this radius is usually equal to the common length of the eccentric rods), and mark on its edge the three points e, E, and C, where the eccentric rods and the suspension rod are respectively attached. Then "fit" these centres to the three curves as shown in the figure, thus fixing the position of the centre line of the link. The point P, where the centre line of the link cuts the line of stroke of the valve, fixes the corresponding position of the valve. This point may be projected down to the horizontal line corresponding to the angle, θ, of the crank, giving one point on the displacement curve corresponding to the given centre of suspension.

(5) Repeat this process for the 24 positions of the crank and then sketch in the displacement curve.

If a value of u is given instead of a position of the centre U, place the crank at 0 degrees and find the position U must occupy so that the centre of the link stands at the given distance u from the line of stroke of the valve.

Fig. 92 shows the link in 12 positions, and the corresponding displacement curve for the Great Eastern Railway motion already considered, when $u = 0$.

Repeat this construction for different values of u, or U, getting in

Digitized by Google

this way a complete family of valve displacement curves. Then add the vertical axis *TT* so that a stated condition of valve setting is satisfied, as for instance, that the leads shall be equal in full forward gear.

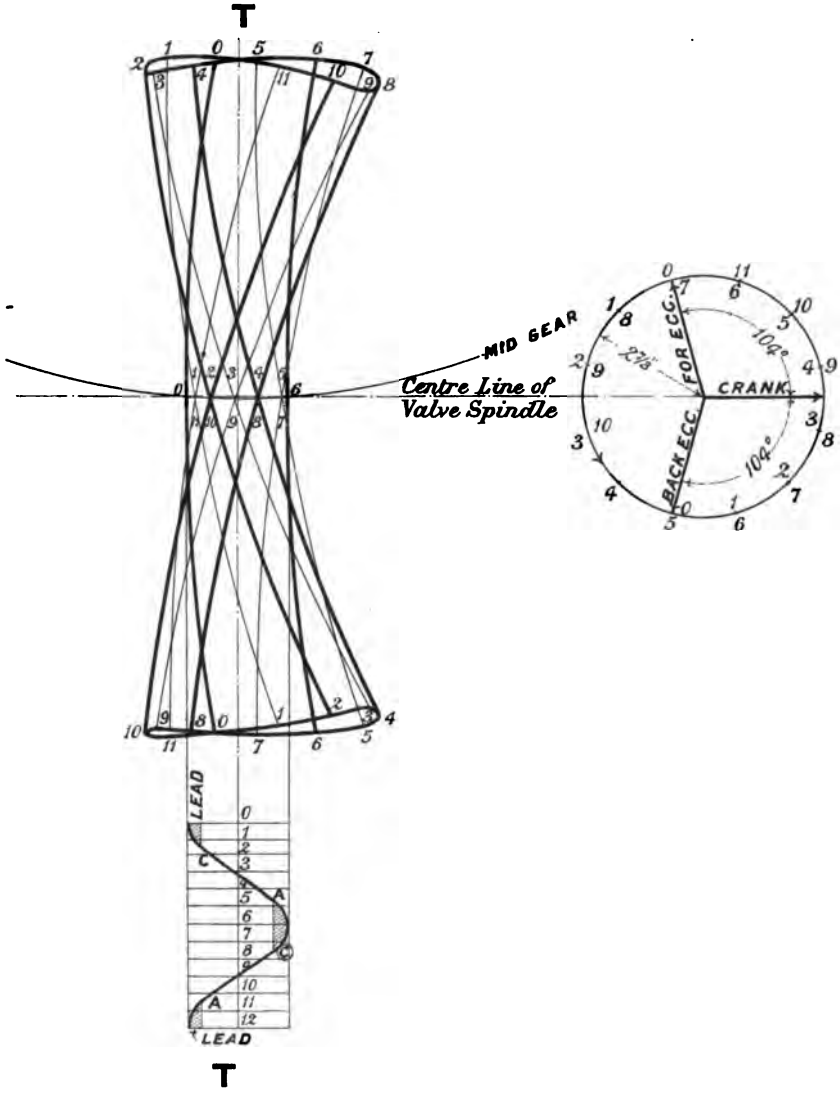

Fig. 92. Link Motion, illustrated in Fig. 76. Twelve Link Positions and the Valve Displacement Curve for Mid-Gear.

The eccentric circle is divided into 24 parts, starting first from the end of the forward eccentric, and then from the end of the backward eccentric, so that the points of the two series of divisions do not

Digitized by Google

necessarily coincide as they appear to do in the figure. The points 1 and 8, for instance, are not coincident, but are very nearly so in the case taken.

92. The suppression of the eccentric rods. The valve displacement is small compared with the size of the parts forming the gear. If the gear is set out to scale, therefore, the displacement to be measured off becomes too small to obtain a valve diagram from which the distribution can be inferred with much accuracy. Consequently, it may be taken as a cardinal rule that the gear should be set out full size so that the valve displacement curves may be obtained full size. The setting out of a link motion, full size, in 24 positions for each value of u taken, is tedious and troublesome. The labour may be considerably lightened by using a template to draw the curves e_1, e_2, and E_1, E_2, in which the ends of the eccentric rods are located. Referring to Fig. 93,

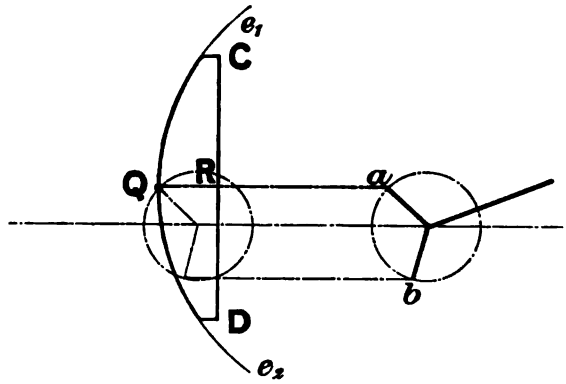

Fig. 93. Use of a Template to draw the Locus of the end of an Eccentric Rod for a given Crank Angle.

it will be seen that if a template curved to the radius of the eccentric rod (the template already made for the centre line of the link will usually do for this purpose providing its edges are finished true with the curve in the way explained in Article 35 and shown in Fig. 28) be placed as shown, it will fit the path e_1e_2, and its radial line QR will be parallel to the line of stroke of the valve, or what is the same thing, its long edge CD will be at right angles to the line of stroke of the valve. If the eccentric circle is brought towards the link a distance equal to the length of the eccentric rod, the point a will coincide with the point Q. Hence, in setting out the construction, Fig. 91, draw the centre of the crank shaft nearer the weigh-bar shaft by a distance equal to the common length of the eccentric rods, and set out the curved

Digitized by Google

paths e_1e_2 and E_1E_2 by means of the template, placing the point Q successively at a and b, and working with the edge CD against the edge of a T-square, in the way illustrated in Fig. 28.

If the gear is to be set out in 24 positions of the crank, there will be 24 points corresponding to a and 24 corresponding to b. It is advisable to first draw all the curves passing through the 24 positions of a in red, and the curves passing through the 24 positions of b in blue, clearly numbering each curve with the number of the corresponding crank position. Then the link template may be fitted in succession to the several pairs of paths and to the curve C_1C_2 and its 24 positions drawn in. The several intersections of the link with the line of stroke of the valve then fix 24 positions of P from which the displacement curve can easily be drawn.

It is also advisable to draw the set of link positions for a given value of u on a sheet of tracing paper, taking a fresh sheet for each value of u.

93. Slip. The axis of the motion block M, Fig. 76, is guided in a straight line by the intermediate spindle I.

Any point in the centre line of the link is compelled to move in a path determined jointly by the oscillation of the link about its axis of suspension, due to the action of the eccentric rods, and to the swinging of the link as a whole about the fixed axis of suspension U.

Thus, when the axis of the motion block is brought to coincide with a definite point on the centre line of the link by the turning of the weigh-bar shaft into a definite position, the coincidence is only momentary, since each point moves away from the position of coincidence along a different path as the crank rotates. Hence there must be slight relative sliding between the block and the link in order that the axis and the point may each be able to describe their respective paths. This relative sliding is called "slip." It will be remembered that the quantity u was defined in Article 86 to be the distance of the axis of the motion block from the centre of the link when the crank was in the zero position. Owing to the "slip," u changes continuously in value during the rotation of the shaft, returning to its stated value each time the crank passes through its zero position.

The distance from a curve showing the actual path of a point on the centre line of the link corresponding to a stated value of u, measured along the link, to the corresponding point on the path of the centre of the motion block, is the slip for that particular link position. Various methods of suspending the link and constraining the motion of the

Digitized by Google

intermediate spindle or link have been used from time to time with the object of reducing the slip to a minimum. Good general results for all positions of the gear are obtained by guiding the intermediate spindle in a straight line and by swinging the link from its centre as shown in Fig. 76. Better results for one or two particular positions of the gear can be obtained by varying the method of suspension and constraint.

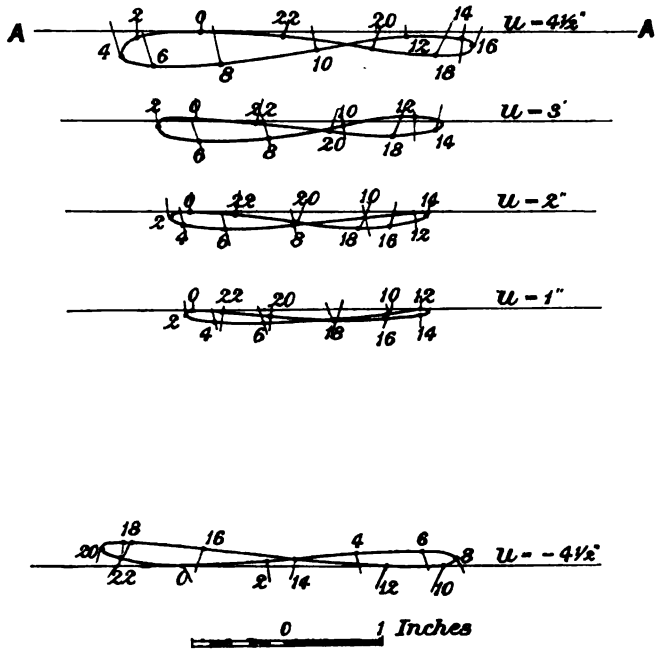

Fig. 94. Link Motion, Fig. 76. Paths of Points on the centre line of the Link specified by the given values of u.

A series of link point paths for the Great Eastern Railway motion already considered is shown in Fig. 94, the values of u to which they correspond being written against them. Consider the curve for which $u = 4\frac{1}{2}''$. The horizontal straight line AA represents the path of the axis of the motion block. At the point 0, the axis is $4\frac{1}{2}''$ from the centre of the link, and the crank is in the zero position. The other figured points on the curve mark the successive positions occupied by the point on the centre line of the link, $4\frac{1}{2}''$ from the centre, as the crank passes through the corresponding positions. The distance from any one of these points to the corresponding position of the axis of the motion block, measured along the link, is the instantaneous value of the slip.

The point path for mid-gear is an arc of the circle described by the centre of the end of the suspension link.

Digitized by Google

Fig. 95 shows the point paths corresponding with the various values of u indicated, and at the same time the corresponding paths of the ends of the link, to a small scale.

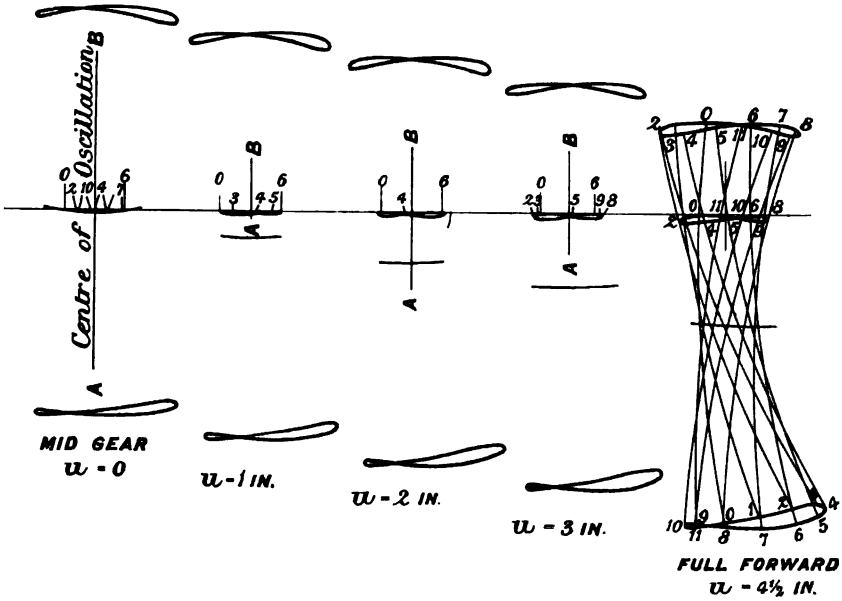

Fig. 95. Link Motion, Fig. 76. Link Point Paths.

94. Apparatus for drawing valve displacement curves mechanically. The labour involved in drawing out a set of displacement curves is considerable. Many drawing offices are provided with a skeleton link motion, the different parts of which are adjustable, so that it may be arranged to represent any link motion in course of design. Parts representing the connecting rod and piston are combined with the valve gear, so that when the crank is placed at any angle the corresponding position of the piston and the valve may be observed, and thus all the peculiarities of the distribution effected by the gear may be studied. In some cases apparatus is added by means of which displacement curves may be drawn, usually in the form shown in Fig. 39.

Fig. 96 represents an apparatus of a simpler kind than that usually employed for the purpose of investigating the properties of a link motion, which was designed by the author for the Mechanical Engineering Department of the City and Guilds of London Technical College, Finsbury. The eccentricities, angular advances, lengths of the eccentric rods, position of the weigh-bar shaft, and the length of the arm of the

Digitized by Google

weigh-bar shaft which fixes the point of suspension; are all adjustable within reasonable limits. Simplicity is obtained by omitting the connecting rod and piston altogether, a graduated ring being used in order to fix the crank angle corresponding to a given valve position.

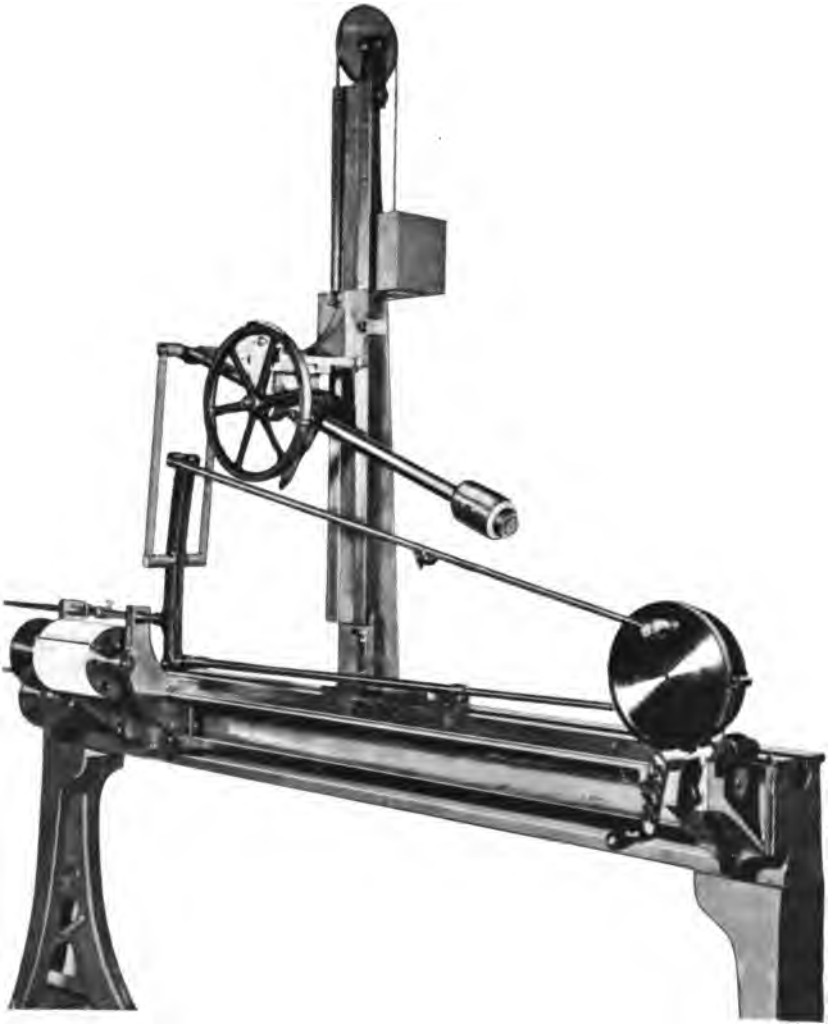

Fig. 96. Adjustable Apparatus for drawing the Valve Displacement Curves.

What is obtained from the apparatus is a family of rectangular displacement curves, like those for example shown in Fig. 86. These curves are drawn on the drum seen to the left of the figure. The piston displacement curve can be quickly and accurately drawn on the

Digitized by Google

diagram, and then the additions of a common vertical axis and the lap lines convert the drawing into a valve diagram from which all the circumstances of the distribution can be found.

95. Approximate valve displacement curves. Equivalent eccentric. For a given value of u, the actual movement of the valve is nearly the same as it would be if the valve spindle were connected directly to a long eccentric rod driven by a sheave on the crank shaft, having a certain eccentric radius ρ and being set at a certain angular advance ψ, ρ and ψ being found by the following rule, due to Mr Macfarlane Grey.

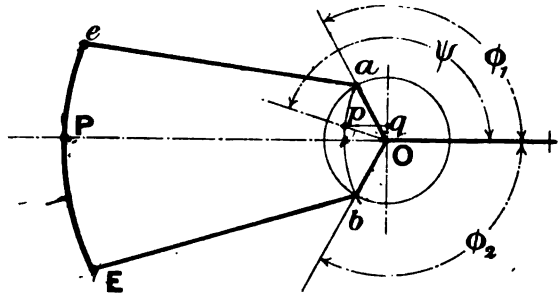

Fig. 97. MACFARLANE GREY'S CONSTRUCTION FOR THE EQUIVALENT ECCENTRIC.

Let Oa, Ob represent the centre lines of the two sheaves driving the link motion, ϕ_1 and ϕ_2 being the angular advances. Draw an arc of a circle through the points a and b, using the radius, R, found from the formula

$$R = \frac{s \times l}{2k},$$

where s is the distance between the points a and b, l is the common length of the eccentric rods, and k is the length of the link eE.

Take a point p in the arc ab so that it divides the arc in the same proportion that the axis of the motion block divides the distance between the end centres of the link. That is,

$$ap : pb = eP : PE.$$

Then Op is the radius, ρ, of the "equivalent" eccentric, and ψ is its angular advance. From these data the corresponding displacement curve may be set out. It is of course a cosine curve, having the value pq when the crank is in the zero position.

The dotted curve, Fig. 98, is the approximate displacement curve found by this method for the value of u, $+ 4\frac{1}{2}''$, the data being those of the Great Eastern Railway motion. It is shown full size.

Digitized by Google

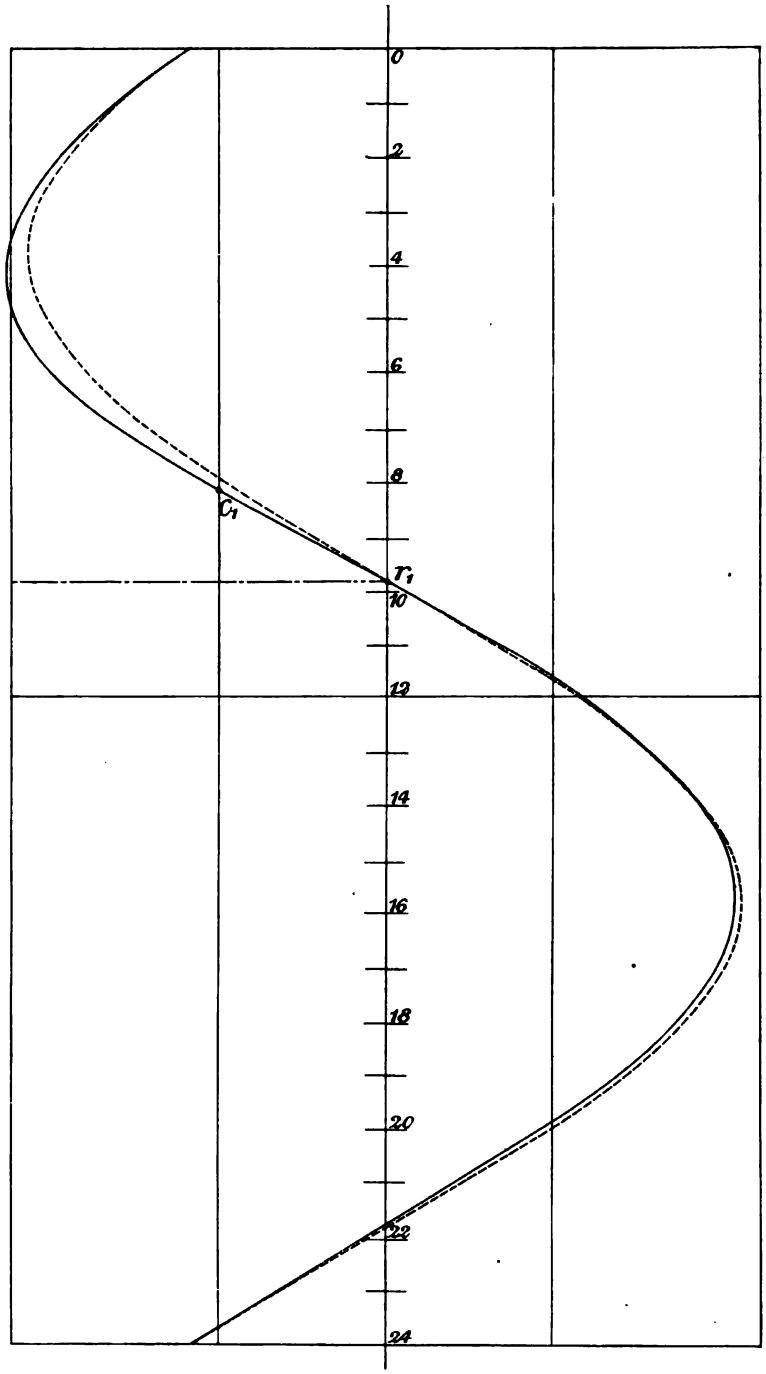

Fig. 98. Link Motion, Fig. 76. Comparison of the actual Displacement Curve, shown full, with the approximate Displacement Curve, shown dotted, corresponding with the "Equivalent Eccentric" found by Macfarlane Grey's construction, for $u = 4\frac{1}{2}''$.

Digitized by Google

The radius used for drawing the arc is in this case 8·47″. The corresponding equivalent eccentric is defined by

$$\rho = 1{\cdot}86'', \quad \psi = 124\tfrac{1}{2} \text{ degrees.}$$

The full line shows the actual displacement curve and is of course the same as the corresponding curve of Fig. 86. A comparison of these curves shows that at the beginning of the strokes, when the crank angle is either 0 or 180 degrees there is almost coincidence. The greatest error occurs in the maximum openings. If the piston displacement curve be added it will be found that the cut off given by the dotted curve is within 3 per cent. of the actual cut off, whilst the release, compression and admission events are within less than 1 per cent.

96. General theory of the link motion. Simplified form of gear and its equivalent eccentric. The theory of the link motion and its derivatives, the Gooch and Allan gears, will be more easily understood if the simpler form of gear shown in Fig. 99 is studied first. This form, though not practicable, yet retains the fundamental principles of the actual arrangement and allows these principles to be developed without mathematical complication.

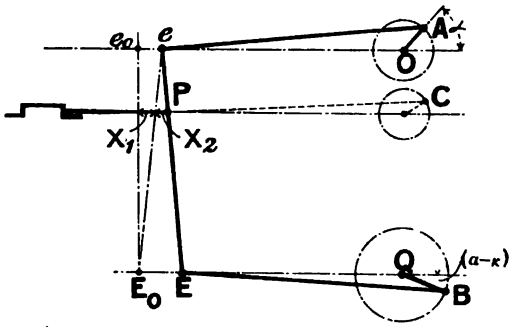

Fig. 99. Simplified form of Link Motion.

In the figure the link is represented by the straight line *Ee*, the eccentrics by the cranks *OA*, *QB*, now rotating about separate axes, *O* and *Q*. The valve is connected to the link *Ee* at the point *P*, and it is presumed that the valve and rod can be moved bodily up or down so that *P* can be placed in any assigned position on *Ee*. Finally, the respective ends of the link are assumed to move along the straight parallel lines *eO*, *EQ*, and the eccentric rods are supposed to be so long that the respective motions of *e* and *E* are not sensibly different from the horizontal projections of the circular motions of *A* and *B*.

Each crank is supposed to revolve with equal angular velocity, from which assumption it follows that the angle between the cranks will

Digitized by Google

remain constant. Let κ be this constant angle, and let α be the angle between the crank OA and the centre line. The movement of the point P is compounded of the movement of the points e and E. This movement may be analysed into its separate components by examining the motion P receives from the crank OA, assuming the crank QB to be at rest; and then the motion it receives from QB, assuming OA to be at rest. The points E_0 and e_0 indicate the respective central positions of the ends of the eccentric rods.

First, assume the point E to be at rest in its central position E_0. Then when the eccentric OA, whose radius is r_1, is turned so that it makes the angle α with the centre line, the distance, e_0e, of the point e from its central position is

$$r_1 \cos \alpha,$$

and since the link is turning about the point E_0, the corresponding distance of P from its central position is, assuming the angular motion of the link Ee to be small,

$$\frac{PE}{Ee} \times r_1 \cos \alpha = X_1, \text{ say.}$$

Again, assume the point e to be fixed in its newly acquired position, e, whilst the eccentric QB, whose radius is r_2, is turned so that it assumes its proper position relative to OA. Then the distance, E_0E, of the point E from its central position is

$$r_2 \cos (\alpha - \kappa),$$

and P moves from the position into which it was brought by the turning of OA by the amount

$$\frac{Pe}{Ee} \times r_2 \cos (\alpha - \kappa) = X_2, \text{ say.}$$

The total movement of P from its central position when the eccentrics have the configuration shown in the figure is therefore

$$X_1 + X_2 = \frac{PE}{Ee} r_1 \cos \alpha + \frac{Pe}{Ee} r_2 \cos (\alpha - \kappa).$$

From this expression the distance of P from its central position can be calculated for any value of the angle α when the position of P is assigned in the link and r_1, r_2, and κ, the angle between the eccentrics, are known. The graphical interpretation of this expression readily exhibits the characteristics of the motion of P.

From any point O, Fig. 100, draw OA, OB parallel to the respective eccentrics in Fig. 99, and make $OA = r_1$ and $OB = r_2$.

On OA take $Oa =$ to $\frac{PE}{Ee} \times r_1$. Then Ox_1 is equal to X_1.

Digitized by Google

On OB take $Ob =$ to $\frac{Pe}{Ee} \times r_2$. Then Ox_3 is equal to X_2.

Complete the parallelogram $OaCb$, and draw the diagonal OC. Then the distance $dC =$ the distance Ox_2, and therefore Ox_3 is equal to $X_1 + X_2$. But Ox_3 is the projection of the line OC. Therefore the displacement of P from its central position is represented by the projection of the diagonal OC. Now since the cranks revolve so that the angle κ remains constant in value, the angle AOB will remain constant whatever be the value of α. Also, since during the revolution of the cranks the point P divides the link Ee in a constant ratio, the respective distances Oa, Ob, remain constant. Therefore the diagonal remains constant. Hence, as the eccentrics revolve, the parallelogram $OaCb$ revolves about O without changing its shape, or its angular position relatively to the lines OA and OB. Hence, since the projection of the diagonal always gives the distance of the point P from its central position, OC, it is the "equivalent eccentric" for the motion of the point P.

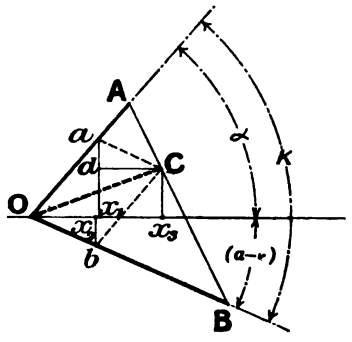

Fig. 100. Equivalent Eccentric corresponding with the Simplified Gear, Fig. 99.

Again, the point a divides the line OA in the same proportion that the point P divides the link Ee. Also b divides the line BO in the same proportion that P divides the link Ee. Therefore

$$Aa : aC = Cb : bB,$$

and the angles AaC and CbB are equal. Therefore the triangles AaC and CbB are similar. Since, therefore, aC is parallel to bB, AC is parallel to CB, but C being a common point, the lines AC and CB are in the same straight line, and this line is divided by the point C in the same ratio that a divides OA, that is in the same ratio that P divides the link Ee. Hence to find the equivalent eccentric for a given position of P:—

Set out the two eccentrics from a common point O, making the

Digitized by Google

constant angle κ with each other. Join the ends with a straight line and take the point C so that it divides AB in the same ratio that the assigned position of P divides the link Ee. Join OC. Then OC is the equivalent eccentric for the motion of P.

The equivalent eccentric is shown dotted in Fig. 99. It will now be understood that, if the equivalent eccentric be made a real eccentric, and if the point P is connected to it by a real eccentric rod, and both the actual eccentrics and the link be taken away, P, being constrained to move in a straight line, will receive the same motion from the single eccentric that it actually received from the combined action of the two actual eccentrics and the link.

The link in Fig. 99 will receive the same motion if it is driven by the equivalent eccentric and either of the actual eccentrics, the other being suppressed.

For instance, suppose OA to be connected to the link as before, the dotted equivalent eccentric gear to be made into a real gear and the eccentric QB and its gear to be suppressed altogether. Every point in the link will move in exactly the same way as it did under the joint action of the cranks OA and QB.

Examining the motion of the point E, it will be found that it may be considered due to an imaginary eccentric QB found by joining the points A and C and taking B so that

$$AC : CB = eP : PE.$$

97. Approximate theory of the Stephenson link motion. Equivalent eccentric. Passing from the simplified form, Fig. 99, to the actual form, Fig. 101, the main differences in the conditions of motion of the link are:—

(1) The point P is compelled to move in an exact, or in some cases an approximately horizontal line, so that when its position is changed relatively to the link, the link itself must be raised or lowered.

(2) The point e moves nearly in a line, passing through the central position e_0 and the centre of the axle; and E moves nearly in a line, passing through its central position E_0 and the centre of the axle.

Now, the motion of P can only be approximately represented by an equivalent eccentric, because although for any one configuration of the gear it is theoretically possible to construct the parallelogram $OaCb$ of Fig. 100 and obtain the diagonal OC, the combined effect of the changes in the configuration of the gear, requires, that the parallelogram be

Digitized by Google

slightly changed in shape for each change of the value of α, if the projection of its diagonal is to accurately represent the motion of P. Thus, during the rotation of the cranks the shape of the parallelogram is continuously varying about some one mean shape. The length of the equivalent eccentric is therefore continuously changing slightly both in length and in its angular position relatively to the real eccentrics for a given value of u.

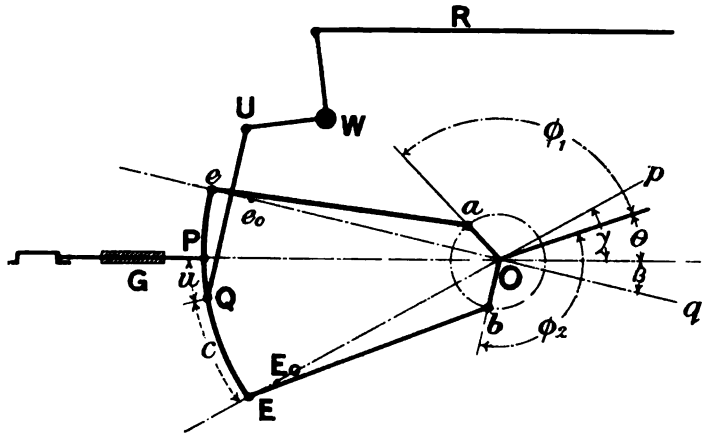

Fig. 101. Centre Line Diagram of Stephenson Link Motion.

Since the link motion is to be used as an expansion gear, a necessary condition which must be fulfilled is, that the raising or lowering of the link shall not seriously interfere with the lead of the valve for all the possible positions of P in the link. The geometrical problem may be stated as follows:—

> Place the crank at the zero position and find the form of link so that it may be moved from one extreme position to the other, by the weigh-bar shaft, without moving the point P.

This problem presents no difficulty theoretically, because it is easy to find the shape to which the link must be curved to fulfil the given condition, by drawing the several configurations of the gear corresponding to a series of positions of the point of suspension U, whilst the crank is kept at zero. Practically, however, the problem cannot be solved for the Stephenson link motion, because the theoretical shape of the link must necessarily be of varying curvature, whilst in practice the link must be made of constant curvature to enable a motion block having surface contact with the link to be used in the slot. Hence, the link must be curved to the arc of a circle. The usual practice is to make the radius of the link equal to the common length of the eccentric rods.

Digitized by Google

The motion of the point P may now be examined in order to fix the equivalent eccentric corresponding to a given position of P in the slot, that is corresponding to a given value of u.

It is assumed in the investigation that:—

(1) The point e moves with simple harmonic motion in the straight path e_0O; and E with simple harmonic motion in the straight path E_0O.

(2) The inclinations, β and γ, of the two paths to the line of stroke of the valve are so small that, l being the common length of the eccentric rods, the sines of the angles are given respectively by

$$\frac{Pe}{l} \text{ and } \frac{PE}{l},$$

that is by

$$\frac{c-u}{l} \text{ and } \frac{c+u}{l},$$

where c represents half the length of the link; and that the cosines of the angles are so nearly unity that $\cos\beta = \cos\gamma = 1$ may be written without introducing sensible error.

(3) The value of u remains constant during rotation of the crank.

The method followed is the same in principle as that used for the simplified form, only now the displacement of P is to be expressed in terms of the main crank angle, the eccentric cranks being fixed relatively to the main crank by their respective angular advances.

Let the gear have the configuration shown in Fig. 101. U is fixed, and u is assumed to have a constant value. The only variable angle is θ.

The angles made by the eccentrics Oa, Ob, with their respective lines of stroke, are aOq and bOp. Expressing these in terms of θ, the angular advances, and the inclinations of the lines eO and EO,

$qOa = (\theta + \phi_1 + \beta)$ measured counterclockwise from Oq,
$pOb = 360 - (\gamma + \phi_2 - \theta)$ measured counterclockwise from Op.

The displacement of e from its central position in its line of stroke is, r_1 being equal to Oa,

$$r_1 \cos(\theta + \phi_1 + \beta),$$

and since $\cos\beta$ is taken equal to unity this also represents the displacement in the direction parallel to the direction of motion of P.

The corresponding displacement of P relative to the point E is

$$\frac{c+u}{2c} \times r_1 \cos(\theta + \phi_1 + \beta).$$

Digitized by Google

Again, the displacement of E from its central position is, r_2 being equal to Ob,

$$r_2 \cos(\gamma + \phi_2 - \theta),$$

and since $\cos\gamma$ is taken equal to unity, this also represents the displacement parallel to the direction of motion of P.

The corresponding displacement of P relative to the point e is

$$\frac{c-u}{2c} \times r_2 \cos(\gamma + \phi_2 - \theta).$$

Hence the displacement, x, of P, from its central position, given by the sum of these separate displacements, is

$$x = r_1 \frac{c+u}{2c} \cos\{\theta + (\phi_1 + \beta)\} + r_2 \frac{c-u}{2c} \cos\{(\gamma + \phi_2) - \theta\} \quad \ldots(1).$$

The displacement x can be calculated from this expression for any assigned value of u and θ.

Expanding this expression, dropping the suffixes for r and ϕ, since these quantities are usually made respectively equal, and writing the terms as factors of $\sin\theta$ and $\cos\theta$, (1) becomes

$$x = r\cos\theta \left\{\frac{c+u}{2c}\cos(\phi+\beta) + \frac{c-u}{2c}\cos(\gamma+\phi)\right\}$$
$$+ r\sin\theta \left\{\frac{c-u}{2c}\sin(\gamma+\phi) - \frac{c+u}{2c}\sin(\phi+\beta)\right\} \ldots\ldots\ldots(2).$$

Expanding the cosines and sines in the brackets and writing

$$\cos\beta = \cos\gamma = \text{unity},$$

$$x = r\cos\theta \left[\cos\phi - \sin\phi \left\{\frac{c+u}{2c}\sin\beta + \frac{c-u}{2c}\sin\gamma\right\}\right]$$
$$+ r\sin\theta \left[\cos\phi \left\{\frac{c-u}{2c}\sin\gamma - \frac{c+u}{2c}\sin\beta\right\} - \frac{u}{c}\sin\phi\right] \ldots\ldots\ldots(3).$$

Substituting the value $\frac{c-u}{l}$ for $\sin\beta$ and the value $\frac{c+u}{l}$ for $\sin\gamma$ this expression further reduces to

$$x = r\cos\theta \left\{\cos\phi - \frac{c^2-u^2}{cl}\sin\phi\right\} - r\sin\theta \left\{\frac{u}{c}\sin\phi\right\} \ldots\ldots\ldots(4)^*.$$

This is the simplest form to which it can be reduced.

* If $\cos(90+\delta) = -\sin\delta$, and $\sin(90+\delta) = \cos\delta$ are respectively introduced into this equation in place of $\cos\phi$ and $\sin\phi$, it reduces to

$$-r\cos\theta \left[\sin\delta + \frac{c^2-u^2}{cl}\cos\delta\right] - r\sin\theta \left\{\frac{u}{c}\cos\delta\right\}.$$

Changing the signs all through, this is the form in which the equation was originally given by Zeuner.

Digitized by Google

The coefficients of $\cos\theta$ and $\sin\theta$ in expression (4) are constants for a particular value of u, neglecting the small variations of u discussed in Article 93. Hence the displacement of the valve from its central position may be written

$$x = A\cos\theta - B\cos\theta \quad \text{.....(5)},$$

where A and B are constants, having the values

$$A = r\left\{\cos\phi - \frac{c^2 - u^2}{cl}\sin\phi\right\} \quad \text{.....(6)},$$

$$B = r\left\{\frac{u}{c}\sin\phi\right\} \quad \text{.....(7)}.$$

No restriction was put upon the magnitude of the angle ϕ in the preceding investigation, so that the expressions are true for all values of ϕ between 0 and 360 degrees. The expressions apply therefore to all arrangements of the link motion, whether with crossed or open rods, providing always that the angle ϕ is measured in the positive direction from the crank to the eccentric radius which is coupled to the top of the link. The following Table shows the quadrant in which the eccentric radius falls for several cases.

TABLE 8.

	ϕ falls between
Open rods. Outside Steam Admission. Figs. 82 and 86.	90 and 180 degrees
Crossed rods. Inside Admission. Figs. 83 and 90.	270 „ 360 „
Open rods with a rocking shaft. Inside Admission. Fig. 84.	90 „ 180 „
Crossed rods with a rocking shaft. Outside Admission. Fig. 85.	270 „ 360 „
Crossed rods. Outside Admission. Fig. 89.	180 „ 270 „

To illustrate the general character of the expressions (5), (6), (7), take the data corresponding to Fig. 86, and calculate the values of A and B for full forward gear, where $u = 4\frac{1}{2}''$; also $l = 50''$, $c = 8{\cdot}25''$, and $r = 2{\cdot}875''$.

In this case, $\phi = 104\frac{1}{2}$ degrees, and therefore

$$\cos\phi = -0{\cdot}25, \text{ and } \sin\phi = 0{\cdot}968.$$

Digitized by Google

Substituting these values in equations (6) and (7) it will be found that

$$A = -1{\cdot}042,$$
$$B = 1{\cdot}517.$$

Hence expression (5), for the displacement, becomes

$$x = -1{\cdot}042 \cos\theta - 1{\cdot}517 \sin\theta.$$

Again, consider the same gear when arranged for Inside Steam Admission with crossed rods, as shown in Fig. 90.

The angle ϕ is now $284\frac{1}{2}$ degrees, and therefore

$$\cos\phi = 0{\cdot}25, \text{ and } \sin\phi = -0{\cdot}968.$$

Therefore
$$A = 1{\cdot}042,$$
$$B = -1{\cdot}517,$$

and these, introduced in expression (5), give for the displacement

$$x = 1{\cdot}042 \cos\theta + 1{\cdot}517 \sin\theta.$$

Finally, suppose the gear arranged with crossed rods but Outside Steam Admission, as shown in Fig. 89.

The eccentric coupled to the top of the link is now the one which determines negative rotation. Nevertheless, the angle ϕ is to be measured from the crank to it, giving $\phi = 255\frac{1}{2}$ degrees. Therefore

$$\cos\phi = -0{\cdot}25, \quad \sin\phi = -0{\cdot}968,$$

and
$$A = -0{\cdot}395,$$
$$B = -1{\cdot}517.$$

The expression for the displacement therefore becomes

$$x = -0{\cdot}4 \cos\theta + 1{\cdot}517 \sin\theta.$$

Comparing equations (5) and (7) with equations (6) to (8), Article 72, it will be seen that the quantities A and B may be looked upon as the rectangular projections of a crank of radius ρ and angular advance ψ. That is

$$A = \rho \cos\psi \quad \text{.....(8)},$$
$$B = \rho \sin\psi \quad \text{.....(9)},$$
$$\tan\psi = \frac{B}{A} \quad \text{.....(10)}.$$

The quantities ρ and ψ define the "equivalent eccentric" for the particular value of u taken. The series of equivalent eccentrics corresponding to a series of values of u, may be used to examine the distribution of steam effected by a given link motion, the results being of course approximate only. The calculation of a series of values of A

Digitized by Google

and B for this purpose may be avoided by using an equivalent geometrical method.

When $u = c$, A, eq. (6) page 179, becomes equal to $r \cos \phi$ and B, eq. (7), becomes equal to $r \sin \phi$. The equivalent eccentric then coincides with the actual eccentric which is coupled to the top of the link. When $u = -c$, the equivalent eccentric coincides with the actual eccentric which is coupled to the bottom of the link. When $u = 0$,

$$A = r\left\{\cos \phi - \frac{c}{l} \sin \phi\right\},$$

$$B = 0,$$

$$\tan \phi = \frac{B}{A} = 0.$$

Therefore $\psi = 0$ or 180 degrees, according to the arrangement of the gear.

Let the gear be arranged with open rods and for outside steam admission as illustrated in Figs. 82 and 86. Then ϕ falls between 90 and 180 degrees, and A will be negative, consequently when $u = 0$, $\psi = 180$ degrees. Starting from $u = 0$ and calculating the values of ρ and ψ for a

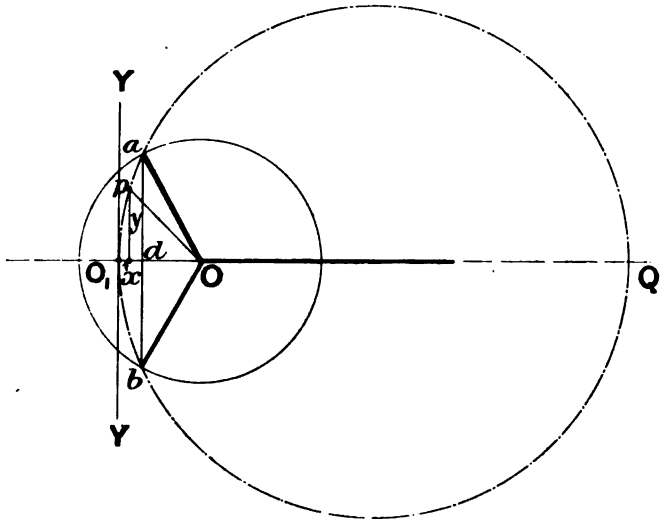

Fig. 102. Equivalent Eccentric. Open Rods. Outside Admission.

series of positive and negative values of u, it will be found that the radius of the equivalent eccentric increases in length from $r\left\{\cos \phi - \frac{c}{l} \sin \phi\right\}$ when $u = 0$, to r when $u = \pm c$: the angular advance decreasing meanwhile from 180 degrees when $u = 0$ to $\pm \phi$ when $u = \pm c$.

Digitized by Google

If these equivalent eccentrics be plotted their ends will be found to lie on a parabolic curve instead of on a straight line as in the case of the simplified form of gear examined first. This is easily proved as follows:

Let the curve *apb*, Fig. 102, represent the locus of the end of the equivalent eccentric. Take any point p on the curve. Take a vertical line through O_1 for the axis of Y, and let the coordinates of the point be x and y. Then x is equal to the difference between the values of A when $u=0$, and when u has the value u_1 corresponding to the particular equivalent eccentric Op. That is

$$x=\frac{ru_1^2}{cl}\sin\phi.$$

The ordinate y is given by the value of B corresponding to the value u_1: that is

$$y=\frac{ru_1}{c}\sin\phi.$$

Eliminating u_1 from these two equations,

$$y^2=x\times\frac{lr}{c}\sin\phi=x\times\text{a constant}.$$

Therefore the curve is a parabola, whose vertex is at O_1.

The parabola through the point O_1 and the ends a and b of the eccentric radii would not differ sensibly from the arc of a circle in any practical case. The radius of this circle may be found by means of the Theorem, that the products of the segments of any two chords in a circle are equal. Applied to this particular case it gives, Fig. 102,

$$O_1d\times dQ=(da)^2.$$

The distance O_1d is the difference between the values of A when $u=0$ and when $u=c$, that is $\frac{rc}{l}\sin\phi$. The distance da is the value of B when $u=c$, that is $r\sin\phi$.

The radius of the large circle being represented by R, the distance dQ is strictly equal to $(2R-O_1d)$, but for the present purpose may be taken equal to $2R$ simply, since O_1d is always small compared with dQ.

Substituting these values in the above equation and solving for R,

$$R=\frac{lr\sin\phi}{2c}.$$

Multiplying numerator and denominator by 2, this becomes

$$R=\frac{2r\sin\phi\times l}{4c}=\frac{s\times l}{2k},$$

Digitized by Google

which is (see Article 95, page 170) Mr Macfarlane Grey's rule so far as the radius is concerned.

The actual position in the arc of the end of the equivalent eccentric corresponding to a given value of u, is given by calculating the value of B, or what amounts to practically the same thing, taking the point p so that the arc is divided proportionally with the link.

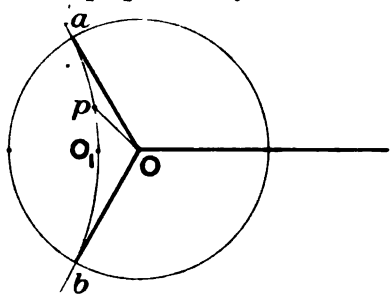

Fig. 103. Equivalent Eccentric. Crossed Rods. Outside Admission.

In the case of crossed rods with outside steam admission, as arranged in Fig. 89, the locus of the end of the equivalent eccentric is a parabola but it is convex towards the centre of the shaft as shown in Fig. 103. The circular arc is to be drawn with the same radius as before, but convex towards the crank shaft as in the case of the parabola it replaces.

98. The design of a link motion. The different steps in the course of a design may be arranged in the following order:—

(1) Make a preliminary drawing of the gear, adapting the general dimensions to the space available. This drawing settles the length of the link $2c$, the length of the eccentric rod l, and the maximum value of u. Keep the eccentric rods as long as possible and the ratio of the length of the rods to the length of the link reasonably large.

(2) Neglect the effect of the obliquity of the connecting rod and (assuming proper values for the cut off, lead, and maximum opening for steam in full gear) find the equivalent eccentric ρ, ψ, and the steam lap either

(*a*) geometrically, by the Bilgram diagram, as in Fig. 50, page 77, or

(*b*) analytically, as in Article 75, page 124.

(3) From the preceding Article, equations (6) to (9),

$$\rho \cos \psi = A = r\left(\cos \phi - \frac{c^2 - u^2}{cl} \sin \phi\right) \text{.....(1)},$$

$$\rho \sin \psi = B = r\left(\frac{u}{c} \sin \phi\right) \text{.....(2)},$$

Digitized by Google

a pair of simultaneous equations in r, the eccentricity, and ϕ the angular advance of the eccentric to be coupled to the top of the link.

Calculate the value of $\frac{c^2-u^2}{cl}$, using the maximum value of u, and denote it by p.

Calculate the value of $\frac{u}{c}$, using the same value of u, and denote it by q.

Using these values in (1) and (2) and dividing (1) by (2) to eliminate r,

$$\cot\phi = q\cot\psi + p \quad\text{.....(3),}$$

from which ϕ can be calculated.

Then r can be found from equation (2).

If the actual eccentrics are made with the eccentricity r and set with respective angular advances $+\phi$ and $-\phi$ the gear will give approximately the distribution specified in full gear. The distribution for values of u other than the maximum, and the actual distribution in full gear, must be found from a drawing of the actual displacement curves.

Example. Design a link motion so that cut off in full gear occurs at 70 per cent. of the stroke, the lead and maximum port opening being respectively 0·1 inch and 1 inch. Following the above instructions:—

(1) Assume the motion to be of the general character shown in Fig. 76. The motion block cannot be brought exactly opposite the end of the eccentric rod in full gear, so that the maximum value of u will be less than c. Let this maximum value be 5 inches, and let the length of the link be 16 inches, so that $c = 8$ inches, and let the length of the eccentric rod, l, be 48 inches.

(2) It will be found that with the data given

$$\psi = 124^\circ\ 50',$$
$$\rho = 2{\cdot}05 \text{ inches},$$
$$\text{Steam lap} = 1{\cdot}05 \text{ inches}.$$

Crank angle at cut off $= 113^\circ\ 35'$, neglecting the obliquity of the connecting rod.

(3) Calculating the values of p and q,

$$p = 0{\cdot}101, \qquad q = 0{\cdot}625.$$

Using these values in equation (3),

$$\cot\phi = -0{\cdot}333,$$

from which

$$\phi = 108^\circ\ 27'.$$

Digitized by Google

With this value of ϕ in equation (2), $r = 2{\cdot}84$ inches. Hence the eccentricity of the actual eccentrics must be 2·84 inches, and they must be set on the shaft at the respective angular advances, 108° 27′ and −108° 27′.

99. The design of a link motion, continued. The weigh-bar shaft. Having obtained the general dimensions of the gear, the centre of the weigh-bar shaft, and the length of its arm, may be chosen within certain limitations so that the inequalities of cut off due to the obliquities of the connecting and eccentric rods may be diminished, and in particular cases may be quite corrected.

The way to do this is to find geometrically a number of positions of the point of suspension U, each position of U being fixed so that the small vertical movement which the suspending rods, vibrating about it as centre, give the link, combines with the horizontal movement the link receives from the eccentrics, to bring the valve to the left of its mid position, by a distance equal to the steam lap, at the instant the piston is at a given percentage of its stroke in the instroke cycle; and to the right of its mid position, by a distance equal to the steam lap, at the instant the piston is at the same percentage of the stroke in the outstroke cycle.

When a number of points have been found for equalising the cut off at a series of percentages of the stroke, the weigh-bar shaft may be designed so that the arc described by the end of its arm passes through one or two of them, or has a suitable mean position with reference to the whole group. Since the locus of U must be made an arc of a circle, any three of the positions of U fix both the length of the arm and its centre uniquely, but it seldom happens that the solution found in this way can be practically used. Working the problem in this way, however, generally leads pretty quickly to the most appropriate compromise in the dimensions of the weigh-bar shaft and the position of its axis.

The details of the construction for fixing one position of U in order to equalise the cut off at 60 per cent. of the stroke, positive rotation, are as follows, the data being:—

Suspending rods, 12 inches long, jointed to the link at the centre.

Connecting rod = 6 cranks.

$l = 48$ inches.

$c = 8$ inches.

$r = 2{\cdot}84$ inches.

$\phi = -\phi = 108\frac{1}{2}$ degrees.

r and ϕ are the values found in the problem of the last article.

(1) Draw a circle of any radius OK_1 to represent the path of the

Digitized by Google

crank pin, K_1. Let s_1Os be the line of stroke so that s_1s represents the stroke of the piston. Take the point c_1 so that $sc_1 = \frac{6}{10}$ of ss_1, and the point c_2 so that $s_1c_2 = \frac{6}{10}$ of s_1s.

Find the corresponding crank pin positions K_1, K_2, and from them set out the centres of the eccentrics, a_1, b_1 from K_1, and a_2, b_2 from K_2, the angles K_1Ob_1, K_1Oa_1, K_2Oa_2 and K_2Ob_2 being each equal to $108\frac{1}{2}$ degrees.

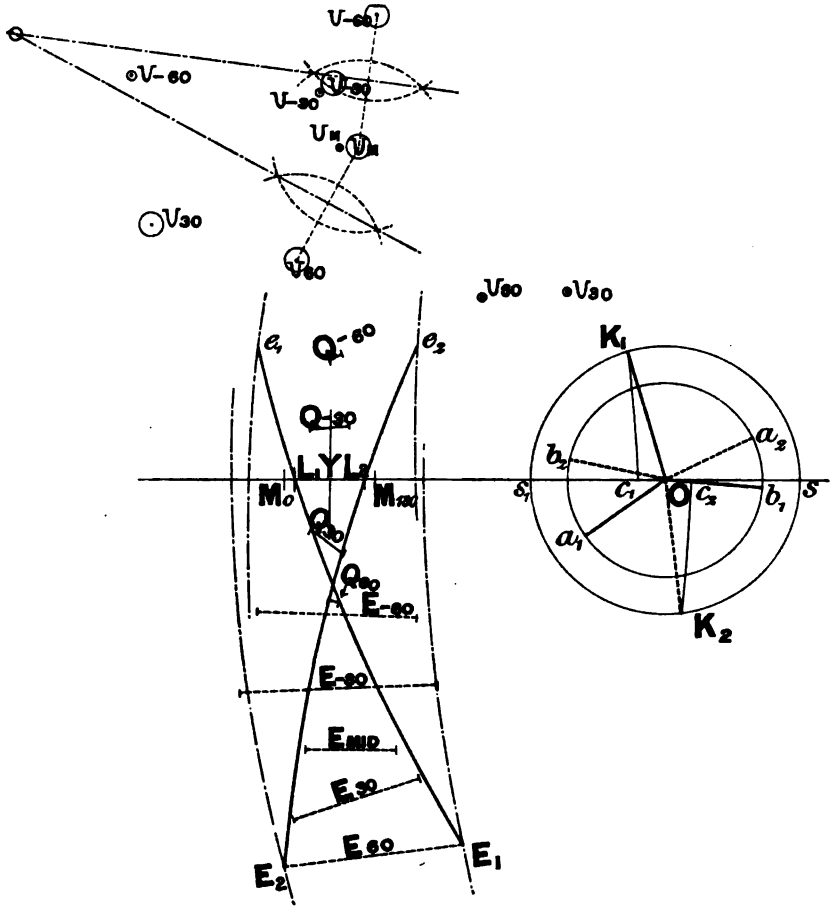

Fig. 104. THE SETTING OF THE WEIGH-BAR SHAFT.

(2) Draw the link in the mid-gear position when the crank is respectively at 0 and 180 degrees. The points at which the link cuts the line of stroke are marked M_0 and M_{180} on the diagram, Fig. 104. Bisect the distance M_0M_{180} in Y. Then a vertical through Y represents the common axis of the displacement curves. Set out YL_1, the

Digitized by Google

steam lap for the instroke cycle, YL_2, the steam lap for the outstroke cycle.

(3) With radius equal to the length of the eccentric rods, and centres a_1, b_1 and a_2, b_2 respectively, draw the infinite arcs which are shown on the drawing passing through the respective points e_1, E_1, e_2, E_2. Then at the instant of cut off in the instroke cycle, the centre line of the link must pass through the point L_1, and the ends of the link must lie on the respective curves e_1 and E_1. The link is shown in the figure fitted to its proper position. Similarly for cut off in the outstroke cycle, the centre line of the link must be fitted to the position $e_2L_2E_2$.

The line joining the respective positions of the point of the link at which it is jointed to the suspension rods may be regarded as the base of an isosceles triangle, the equal sides of which are the respective positions of the suspending rods whose lengths are assumed known. The point of suspension U is therefore fixed by the apex of the triangle.

In the present case the link being jointed with the suspension rods at the centre, the short line indicated by Q_{60} is the base of the isosceles triangle, and U_{60} is the corresponding position of the centre of suspension.

Other positions of U are found in a similar manner. In the diagram four positions of U are shown, namely those equalising cut off at

60	per cent.	for	positive	rotation	and	indicated	by U_{60},
30	„	„	„	„	„	„	U_{30},
30	„		negative	rotation	„	„	U_{-30},
60	„		„	„	„	„	U_{-60}.

The position U must occupy at mid-gear is shown also and is found from the base M_0M_{180}.

The bases of the triangles, of which these points are the apexes, are shown by full lines and are indicated by Q_{60}, etc. It is obviously impossible to fix the weigh-bar shaft so that the end may be turned successively into all these positions. The best that can be done is to arrange the centre so that the end of the arm describes a circular path passing through U_M, and as near as may be to the other positions.

In the figure the five positions of U which are surrounded by large circles have been found on the supposition that the link is jointed to the suspension rods at the lower end E. The dotted lines E_{60}, etc., show the bases of the triangles from which these points were found. It will be seen that the five circled positions of U lie more closely to a mean circular arc through the mid-gear position.

Digitized by Google

This method of considering the design of the weigh-bar shaft is due to Mr W. H. Maw, and was published in 1871*.

It will be clear from the foregoing that, when the link is suspended from the centre, the weigh-bar shaft may be fixed by the following rule. Find the point U for mid-gear, and draw a line through it parallel to the line of stroke. Take W the centre of the weigh-bar shaft on this line, choosing an arm long enough to avoid too much angular motion.

100. The Gooch link motion. Reference has already been made to an essential condition that a link motion must fulfil if it is to be used as an expansion gear, namely, that the changing of the position of the motion block in the link should not seriously interfere with the lead. It has also been shown in the case of the Stephenson link motion, that although for a given position of the motion block in the link the lead may be made practically equal for both cycles, yet when the position is changed, the lead increases towards mid-gear with open eccentric rods, and decreases towards mid-gear when the rods are crossed in the way illustrated in Fig. 89.

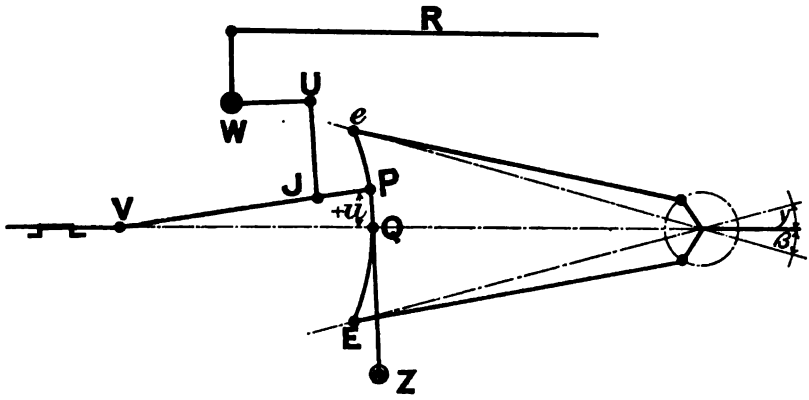

Fig. 105. Centre Line Diagram of the Gooch Link Motion.

In the Gooch link motion the lead remains constant for all positions of the motion block in the link, but this is not secured without making the gear more complex, as will be seen from the centre line sketch, Fig. 105. The centre of the link, Q, is compelled to move in an arc of a circle by the supporting link QZ, which vibrates about the fixed centre Z. The valve rod, now jointed with the valve spindle at V, is held by the suspending link UJ, U being the centre of suspension. The position of P in the link is controlled by the turning of the weigh-bar shaft

* See *Locomotive Engineering*, Zerah Colburne. H. Collins & Son, London and Glasgow.

Digitized by Google

about its fixed axis W, by the reversing rod R. In this gear the displacement of the point V represents the displacement of the valve.

The displacement curves may be drawn by the same method as that detailed for the Stephenson link motion. In this case, however, in addition to fitting the link to the arcs through the points e, E, and Q, the valve rod must be fitted to the centre line of the link, the arc through J with radius UJ, and the line of stroke through V. The positions of the link are however independent of the value of u, and once they are drawn for say 24 positions of the crank, they will serve over and over again for the various positions of U dealt with.

Approximate displacement curves may however be obtained by the use of equivalent eccentrics as in the Stephenson link motion, the investigation of their elements following the same course as that for the Stephenson motion.

The initial geometrical problem in connection with the gear, in order to secure constant lead for all values of u, may be stated as follows:—

> Place the crank at the zero position and find the form of link, so that the valve rod may be moved from one extreme position to the other without moving the point V.

The obvious solution of this problem is to curve the link to the arc of a circle whose radius is equal to the length of the valve rod and whose centre is V. Then, whether the crank is at 0 or 180 degrees, the valve rod may be moved from one extreme position to the other without moving V, providing that the point Z is chosen so that Q lies in the line of stroke in each of these two positions.

The investigation for finding the mean equivalent eccentric for the motion of V, is based upon the following assumptions:—

(1) The points e and E move with simple harmonic motion in the straight lines joining their respective middle positions with the centre of the crank shaft.

(2) The inclinations of these lines to the line of stroke are so small that the sines of the angles in each case are given by $\frac{c}{l}$, and that $\cos\beta = \cos\gamma = 1$, where c is half the length of the link and l is the common length of the eccentric rods.

(3) The quantity u remains constant during a revolution of the crank for a given position of the centre of suspension, U.

(4) The inclination of the valve rod to the line of stroke is so small that the horizontal motion of P is the same as the horizontal motion of V.

Digitized by Google

The working out is exactly the same as in the Stephenson link motion down to equation (3), Article 97. Here the value $\frac{c}{l}$ is to be substituted for $\sin\beta$ and for $\sin\gamma$. After this substitution the equation at once reduces to

$$x = r\cos\theta\left\{\cos\phi - \frac{c}{l}\sin\phi\right\} - r\sin\theta\left\{\frac{u}{l}\cos\phi + \frac{u}{c}\sin\phi\right\} \text{.....(1).}$$

Hence in the form

$$x = A\cos\theta - B\sin\theta,$$

$$A = r\left\{\cos\phi - \frac{c}{l}\sin\phi\right\} = \rho\cos\psi \text{ .....(2),}$$

$$B = r\left\{\frac{u}{l}\cos\phi + \frac{u}{c}\sin\phi\right\} = \rho\sin\psi \text{.....(3),}$$

ρ being the radius and ψ the angular advance of the equivalent eccentric.

When the crank is in the zero position the expression for the horizontal projection of the equivalent eccentric, namely $\left\{\cos\phi - \frac{c}{l}\sin\phi\right\}$, does not involve u, therefore it is constant. The ends of the equivalent eccentrics therefore lie on a straight line at right angles to the centre line, but distant A from the centre of the crank shaft. The vertical distance of the end of the equivalent eccentric in this line, corresponding to a given value of u, is found by calculating the value of B. If the value of B be calculated for $u = +c$ and $u = -c$, two points a and b will be fixed in the vertical locus, which define the ends of the equivalent eccentric for the extreme positions. Then since B varies as u, the end of the equivalent eccentric in the locus, for a given position of P in the link, is found by taking ρ so that it divides ab in the same proportion that P divides the link.

Fig. 106 shows a Gooch motion as it was fitted to the Sinclair 7′ 0″ single wheel passenger engines of the Great Eastern Railway.

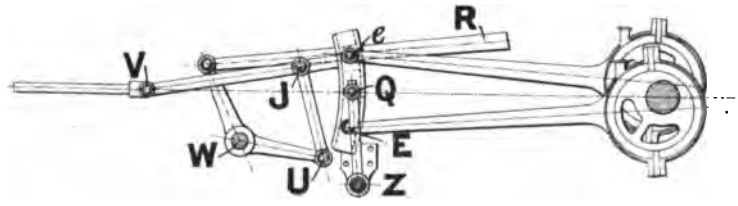

Fig. 106. Gooch Link Motion.

Although the Gooch link motion was extensively used for locomotives in earlier days on account of its then peculiar possession of

Digitized by Google

constant lead for all values of u, it has dropped out of use in the present day.

101. The Allan straight link motion. As its name implies, the characteristic feature of this gear is that the link is straight. At the time link motions were introduced the making of a curved link was more difficult than it is now, and probably this fact determined the endeavour to design a motion with a straight link. Fig. 107 shows a centre line sketch of the gear. The fixed axis of the weigh-bar shaft is at W, and the angular position of the shaft is controlled by the reversing rod R. There are two arms forged solid with the weigh-bar shaft, namely, WU and WZ, connected respectively with the straight link at e and with the valve rod at J. The turning of the weigh-bar shaft in the clockwise direction, lowers the link and at the same time raises the valve rod, the latter turning about the joint V. Thus the distance of the centre, P, of the motion block from the centre, Q, of the link, that is the quantity u, now depends jointly upon the position of the two "points of suspension," Z and U.

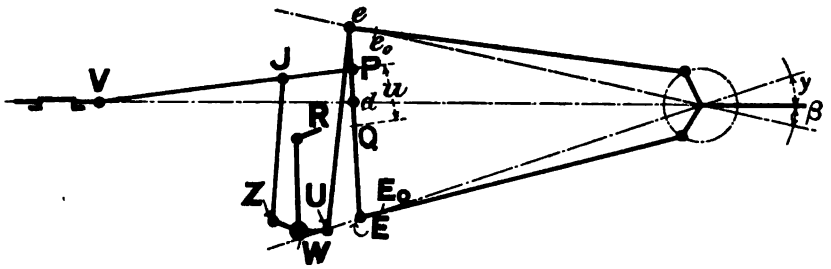

Fig. 107. Centre Line Diagram of the Allan Straight Link Motion.

The gear is similar to the Stephenson link motion in the respect that the link is raised or lowered when the position of P is altered; and it is similar to the Gooch motion in the respect that the valve rod is raised or lowered for the same purpose. This combination of the mechanical peculiarities of both motions makes it possible to use a straight link.

Fig. 108 illustrates the Allan gear fitted to the 6′ 6″, four-coupled passenger engines of the London and North Western Railway—the famous "Precedent" class. The success of these engines in connection with the express traffic of the railway is too well known to need comment. As will be seen from the illustration, the gear is compact; the centre line of the gear is inclined to the line of stroke of the piston allowing ample room for the steam chest, which lies, wedge shaped, above and between the cylinders; the ports are formed in the inclined faces

Digitized by Google

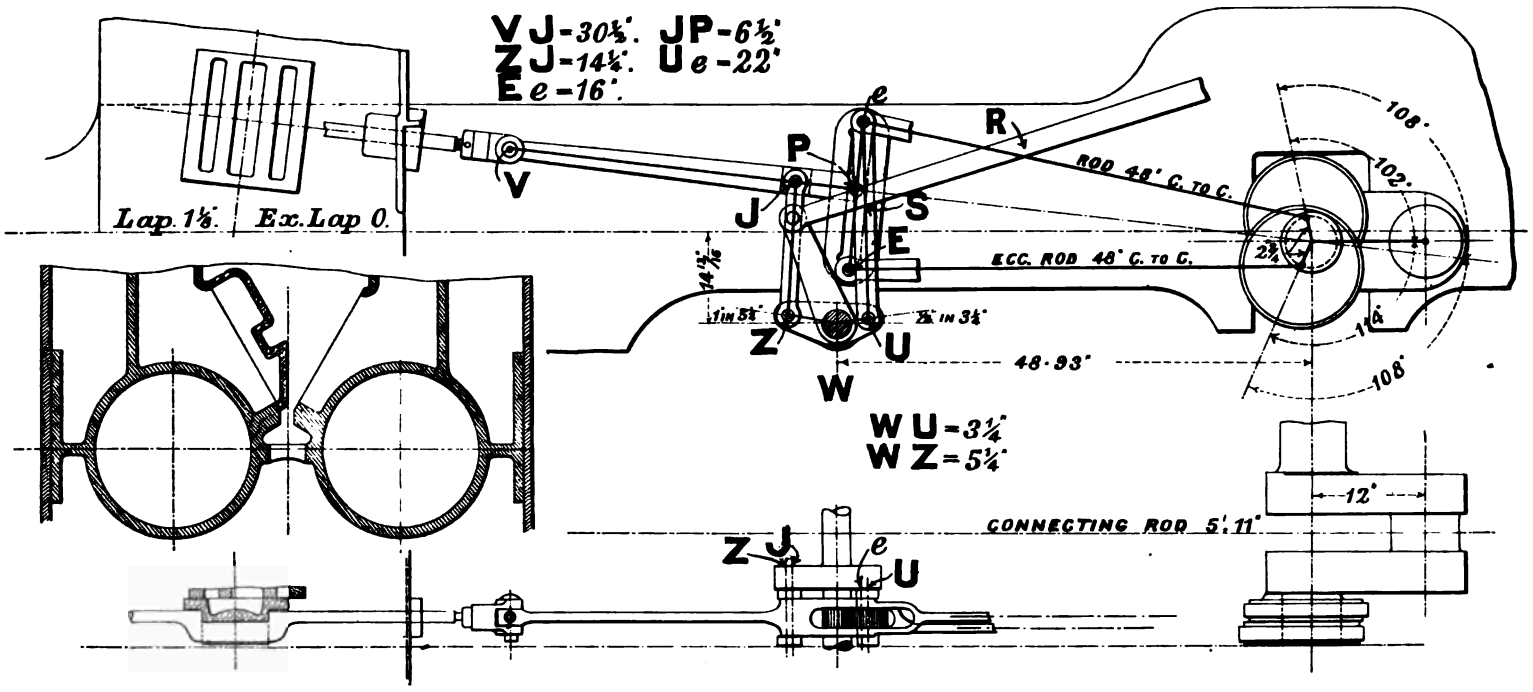

Fig. 108. Straight Link Motion. London and North Western Railway.

Digitized by Google

of the steam chest, and the valves work between them. The way of the steam to the cylinder is made easy, and the way out is also free and unobstructed.

At the present time there are between 600 and 700 engines on the London and North Western Railway fitted with this gear, though not all belonging to the 6′ 6″ class. The advantage of this gear over the Stephenson form of the link motion is that much less room is required vertically to accommodate the link in the two extreme positions since the vertical motion of the link is so much smaller. Also a smaller angular motion of the weigh-bar shaft is required to change the link from one extreme position to the other, and no balance weights are required on the weigh-bar shaft. I am indebted to Mr F. W. Webb for the drawings from which Fig. 108 has been prepared.

102. The Allan motion. On the proportion between the arms of the weigh-bar shaft. The initial geometrical problem is more complex in this gear than in either of the two kinds preceding. It may be stated thus:—

> Place the crank in the zero position and find the ratio between the lengths of the arms WU and WZ, so that when P is moved relatively to the link from one extreme position to the other, the point V shall remain at rest.

An exact solution is impossible, but an approximate solution, which makes the variation of lead considerably less than the variation in a Stephenson link motion, can be readily obtained.

Consider the gear in its central position, Fig. 109. The central point Q, of the link, now coincides with the central point of the motion block. Referring to Fig. 107, it will be seen that when the weigh-bar shaft is turned in the clockwise direction, the centre of the link moves from the position shown in Fig. 109, downwards, to a position Q, shown in Fig. 109 *a*. At the same time the centre of the motion block P, moves up into a new position P, Fig. 109 *a*. The distance PQ is the corresponding value of u assuming that the movement has taken place when the crank was at the 0 degree dead point, as indicated in Fig. 109. The path described by Q during this movement has a varying curvature, because the link, as it moves away from the central position, moves about two centres, namely, the ends of the eccentric radii. The curvature of the path of Q may however be considered constant, its radius being equal to the common length of the eccentric rods. Thus in

Digitized by Google

Fig. 109 *a*, Q is assumed to have moved down in a circular path whose centre is A, and AQ is the length of an eccentric rod. Also during the movement, the link remains sensibly at right angles to the line AQ.

With these assumptions, the angle PQR, Fig. 109 *a*, is equal to the angle QAc, so that the sine of both angles is y_2/AQ.

The problem now is, given a position of Q, to find what position P must occupy in order that the distance AV may remain constant.

Let $AQ = l$, $VP = a$, $VJ = b$, the angle $QAc =$ the angle $PQR = \beta$ and the angle $PVm = \gamma$.

Then, in the central position,

$$AV = a + l.$$

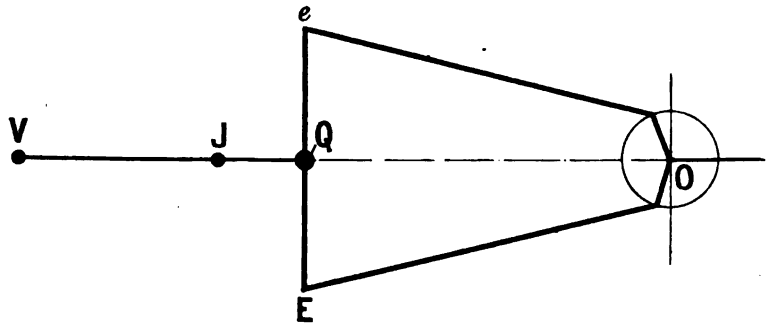

Fig. 109.

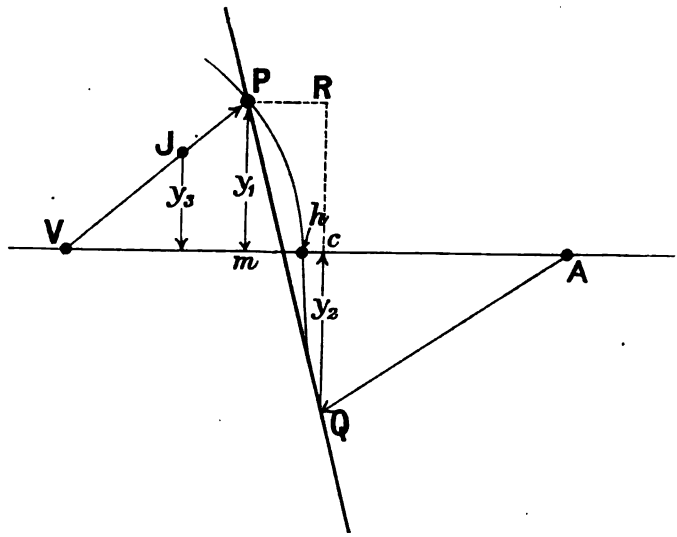

Fig. 109 a. Allan Gear. Proportion of the Weigh-Bar Shaft Arms.

Digitized by Google

In a new position

$$AV = \cos\beta + PQ\sin\beta + a\cos\gamma.$$

In order that AV may be constant

$$a + l = l\cos\beta + PQ\sin\beta + a\cos\gamma.$$

Expressing the cosines in this expression as sines, and using the approximate method $\sqrt{1-q^2} = (1 - \frac{1}{2}q^2)$ for the extraction of the square root after introducing the values

$$\sin\beta = \frac{y_2}{l} \text{ and } \sin\gamma = \frac{y_1}{a},$$

and writing $PQ = u = y_1 + y_2$, since the inclination of PQ is small, the expression reduces to

$$a + l = \left(l - \frac{y_2^2}{2l}\right) + \frac{(y_1 + y_2)\,y_2}{l} + \left(a - \frac{y_1^2}{2a}\right) \quad \text{.....(1).}$$

Put $y_2 = ny_1$, and this reduces to the quadratic

$$an^2 + 2an - l = 0 \text{.....(2),}$$

from which

$$n = \left(-1 + \sqrt{1 + \frac{l}{a}}\right) \quad \text{.....(3).}$$

The quantity under the root will always be greater than unity, so that if the + sign is taken a positive value of n will be obtained as required by the assumption.

In the mechanical arrangement of the gear the upward displacement, y_1, of the point P is obtained by giving a smaller displacement, y_3, to a point J in the valve rod, taken nearer to V, y_3 being found from y_1 by the proportion

$$y_3 = \frac{VJ}{VP} \times y_1 \text{ ....(4).}$$

The ratio between the lengths of the arms of the weigh-bar shaft is given by the ratio between y_3 and y_2, neglecting the effects of the obliquity of the links ZJ and Ue, Fig. 108. That is,

$$\frac{WZ}{WU} = \frac{VJ \times y_1}{VP \times y_3} = \frac{VJ}{VP} \times \frac{1}{n} \text{ .....(5).}$$

For instance in the North Western gear,

$$VJ = 30\tfrac{1}{2}'',$$

$$VP = 37'' = a,$$

$$QA = 48'' = l.$$

From (3)

$$n = \left(-1 + \sqrt{1 + \tfrac{48}{37}}\right) = 0{\cdot}514.$$

Digitized by Google

Using this in (5)

$$\frac{WZ}{WU} = 1{\cdot}604.$$

The actual value measured from the engine is 1·614.

When the maximum value of u is fixed, the distance, y_1, which the point P must rise or fall from its central position is found by combining the relations

$$y_1 + y_2 = u,$$

$$y_2 = ny_1.$$

From these

$$y_1 = \frac{u}{1+n} \quad \text{.....(6).}$$

The distance y_2 which the centre of the link moves above or below its central position is found from

$$y_2 = ny_1 \quad \text{.....(7),}$$

both the quantities on the right side now being known. In the case of the North Western motion, taking $u = 4\frac{1}{2}''$,

$$y_1 = 2{\cdot}97'',$$

$$y_2 = 1{\cdot}52''.$$

103. The Allan link motion, continued. Valve displacement curves of the London and North Western Railway straight link motion illustrated in Fig. 108. Since the line of stroke of the piston is inclined 6 degrees to the line of stroke of the valve, the actual angular advance of the positive (forward) eccentric sheave must be diminished by this amount, and the actual angular advance of the negative (backward) sheave increased by the same amount in order to find the angular differences between the crank and the sheaves to be used in the drawing of the displacement curves.

A set of displacement curves for values of u,

$$4\tfrac{1}{2}'' \qquad 3'' \qquad 1\tfrac{1}{2}'' \qquad 0 \qquad -1\tfrac{1}{2}'' \qquad -3'' \qquad -4\tfrac{1}{2}''$$

is shown in Fig. 110, together with the piston displacement curve and the lap lines, the combination forming the valve diagram for the gear. A detailed explanation of the diagram is unnecessary since it is lettered in a similar way to the valve diagram, Fig. 86, of the Great Eastern Railway link motion.

Digitized by Google

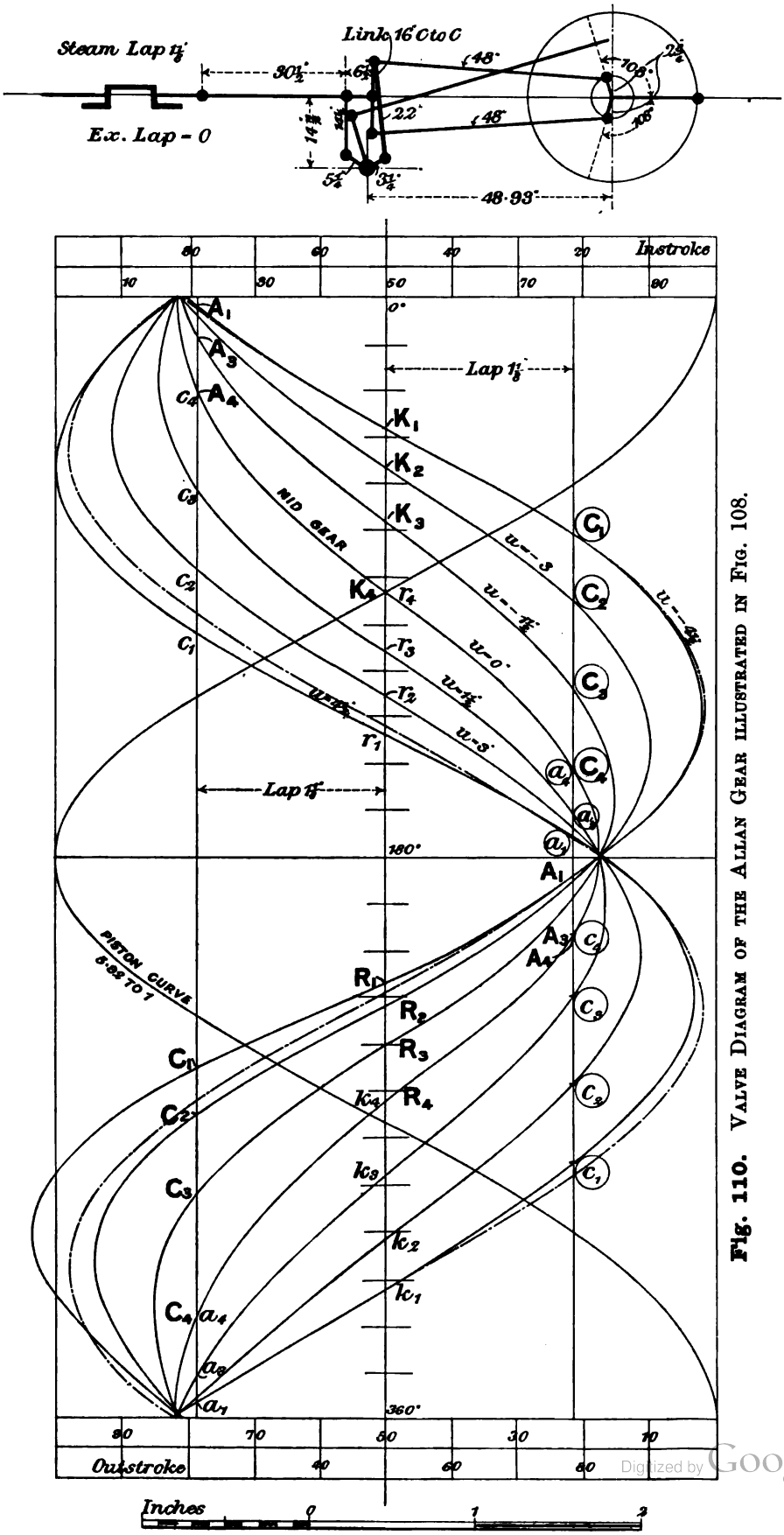

Fig. 110. Valve Diagram of the Allan Gear illustrated in Fig. 108.

Digitized by Google

The most noticeable feature of the Allan gear brought out by the diagram in comparison with the Stephenson link motion is that the lead is nearly constant, otherwise the properties of the gear are much the same. The percentage diagram, Fig. 111, is drawn by plotting data obtained from the displacement curves on a "u" base. From these curves the distribution in the two cycles, together with the maximum port openings both for steam and exhaust, may be found for any assigned value of u.

It should be clearly understood that, as in the case of the Stephenson link motion (see Article 88), a slight change in the position of the axis, W, of the weigh-bar shaft, slightly changes the shapes of the displacement curves, and a slightly different setting of the valve places the vertical axis of Fig. 110 in a different position relatively to the displacement curves so that the percentages of the stroke at which the several events occur are also changed, with a consequent modification of the curves, Fig. 111. Settings of the gear can be arrived at which give a better result in forward gear but only at the expense of greater inequalities in back gear. The setting shown in Fig. 111 is one which gives about equally good results in forward and backward gear. The percentages at which the several events take place are also influenced slightly by changes in the vertical position of the spring supported part of the engine, because whilst the centre of the crank axle always stands at the same vertical distance above the rails, the centre of the weigh-bar shaft and in fact all the rest of the gear moves slightly as the engine rises or falls on the springs.

The respective paths of the centre of the link and the centre of the motion block are shown in Fig. 112 for the case where $u = +4\frac{1}{2}''$. The distance between the curves, measured along the link for the position marked 0, is the value of u, for this is the position occupied by the link when $\theta = 0$. The slip in any position of the link is the difference between u and the distance between the curves measured along the link. Fig. 113 shows similar curves when u is $-4\frac{1}{2}''$.

The drawing of the displacement curves is carried out in the following manner:—

(1) Set out, Fig. 114, the centre line of the valve motion, the centre of the crank shaft O, and the centre of the weigh-bar shaft W.

(2) Bring the centre line of the piston gear into coincidence with the centre line of the valve gear, the positive and negative angular advances then being $+108$ degrees and -108 degrees.

(3) Assume that a displacement curve is to be drawn for a definite value of u. Draw the weigh-bar shaft in the angular

Digitized by Google

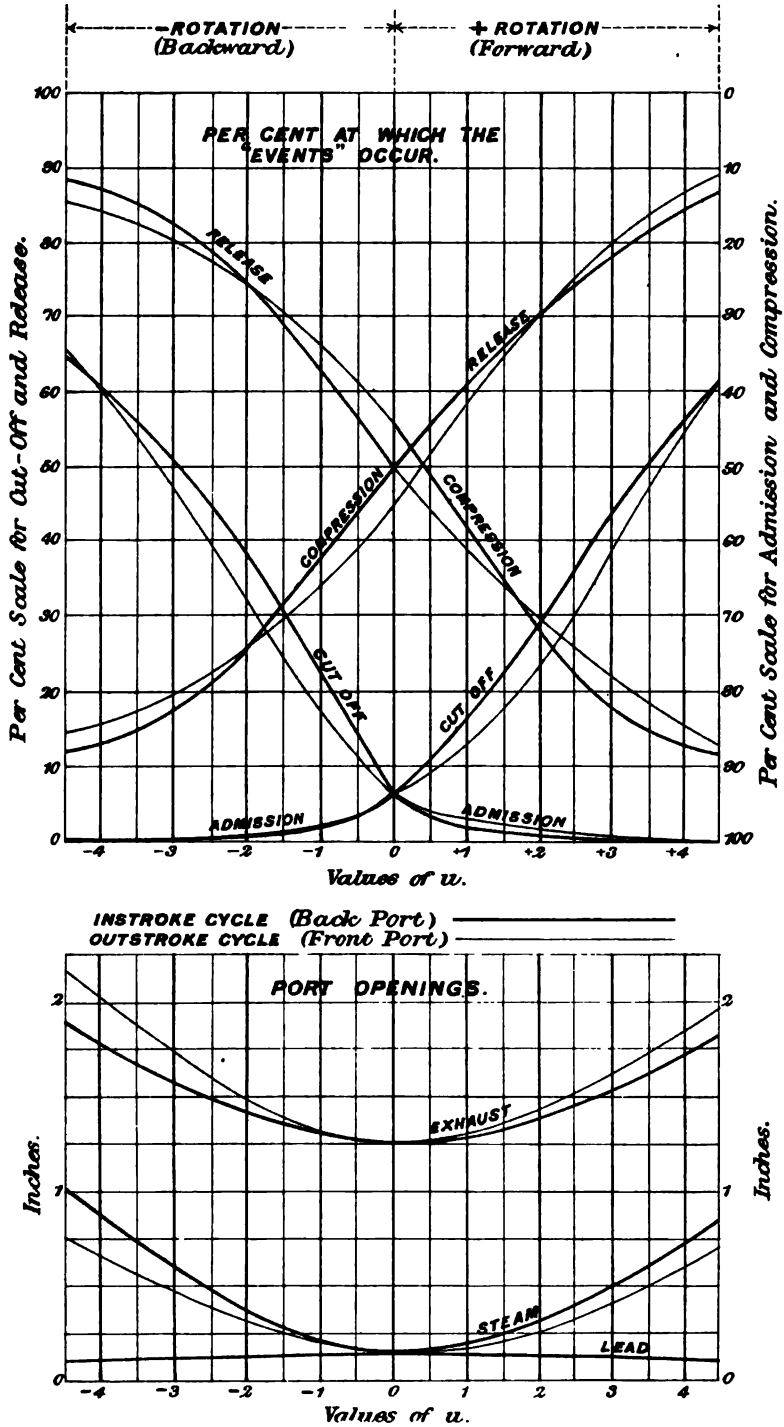

Fig. 111. Percentage and Port Opening Diagrams corresponding with the Valve Diagram, Fig. 110.

Digitized by Google

position corresponding to the given value of u. The approximate positions of U and Z may be found by setting out the values of y_1 and y_2 obtained by calculation from equations (6) and (7), Article 102, and the actual positions which U and Z occupy may then be found quickly by trial. For example in the case of the London and North Western gear, where $n = 0{\cdot}514$, y_1 is equal to 2·97″, and y_2 is equal to 1·52 inches when u is equal to 4½″.

(4) A series of points have now to be found on the displacement curve for 24 equidistant crank positions. Let θ be the angle defining one position. Set out the crank at this angle, and from it measure out the angular advances of the two eccentrics and fix the centres, a, b, of the ends of the eccentric radii.

(5) From a and b respectively as centres and with a radius equal to the common length of the eccentric rods draw the arcs e_1e_2 and E_1E_2.

From U as centre with radius equal to the length of the supporting rod Ue draw an arc cutting e_1, e_2 in e.

With radius equal to the length of the link and from centre e cut the arc E_1E_2 in E. Then eE is the position of the link when the crank angle is θ.

(6) Mark off the centres of the valve rod VJP on a straight edge and place the strip on the drawing so that when V lies on the line of stroke, J lies on an arc struck from the centre Z with radius ZJ, and P lies on the centre line of the link eE.

This fitting of the valve rod is much facilitated if a thin wooden rod of length ZJ is jointed to the straight edge so that the point J is constrained to move in its proper path by pinning down the end of the link ZJ at the centre Z.

This construction determines the position of the valve for the given value of the crank angle θ. Project this position vertically on to a horizontal line corresponding in vertical position to the given angle θ, thereby fixing one point on the displacement curve for the value of u taken in section (3).

Repeat this construction for the 24 positions of the main crank and sketch in the displacement curve.

Assume different values for u, and draw the corresponding displacement curves in like manner. Finally add the vertical axis TT to satisfy some stated condition of valve setting.

Digitized by Google

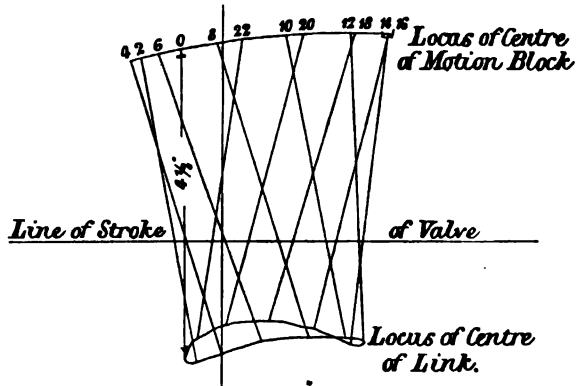

Fig. 112.

LINK POSITIONS OF THE ALLAN GEAR ILLUSTRATED IN FIG. 108.

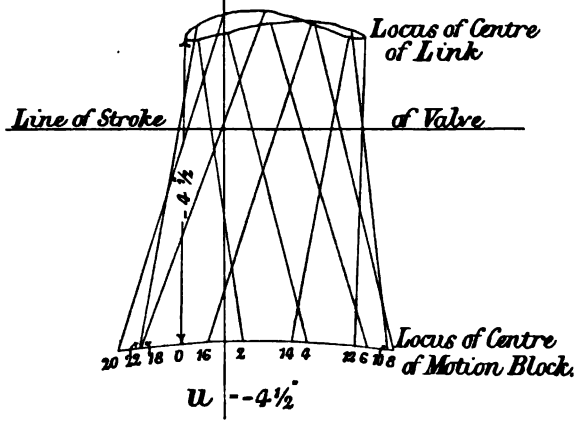

Fig. 113.

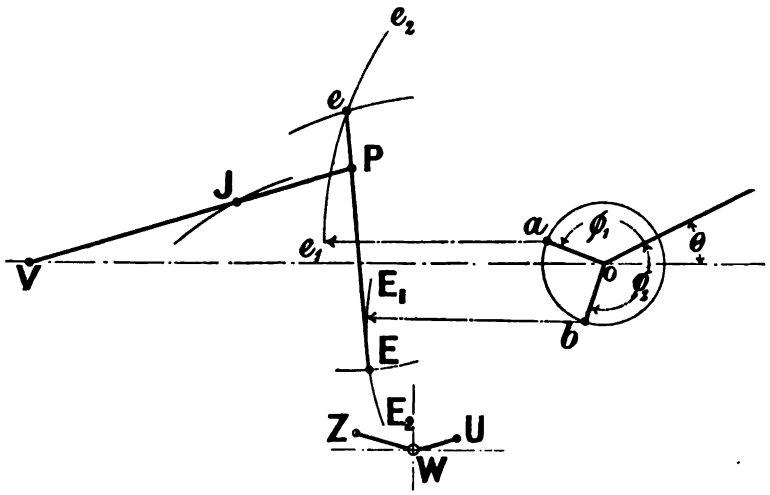

Fig. 114. SETTING OUT AN ALLAN GEAR TO FIND THE POSITION OF *V* CORRESPONDING WITH A GIVEN VALUE OF θ.

Digitized by Google

104. The Allan motion, continued. Approximate theory. Equivalent eccentric. The motion of the point V, Fig. 107, may be investigated by an approximate method from which an equivalent eccentric may be obtained for a given position of P in the link.

It is assumed in the investigation that

(1) The points e and E move with simple harmonic motion in straight lines drawn through their respective mean positions and the centre of the crank shaft.

(2) The inclinations of the two paths to the line of stroke of the valve are so small that the sines of the angles are given by

$$\frac{ed}{l} \text{ and } \frac{Ed}{l},$$

when l = length of the eccentric rod, and that the cosines of the angles are so nearly unity that

$$\cos\beta = \cos\gamma = \text{unity}.$$

(3) The value of u remains constant during a revolution for a given angular position of the weigh-bar shaft.

(4) The inclination of the valve rod to the line of stroke is so small that the horizontal motion of P is the same as the horizontal motion of V.

The working out is exactly the same as in the Stephenson link motion down to equation (3), Article 97. Here the value $\frac{ed}{l}$ is to be substituted for $\sin\beta$, and $\frac{Ed}{l}$ for $\sin\gamma$.

Now $$ed = (Qe - QP + Pd) = (c - u + y_1)$$

and $$Ed = (EQ + QP - Pd) = (c + u - y_1).$$

But $y_1 = \frac{u}{1+n}$ from equation (6) of the last article.

Hence $$\sin\beta = \left(c - u + \frac{u}{n+1}\right) \div l,$$

$$\sin\gamma = \left(c + u - \frac{u}{n+1}\right) \div l.$$

Substituting these values in equation (3), Article 97, it reduces to

$$x = r\cos\theta\left[\cos\phi - \frac{(n+1)c^2 - nu^2}{cl(n+1)}\sin\phi\right]$$
$$- r\sin\theta\left\{\frac{c}{l(n+1)}\cos\phi + \sin\phi\right\}\frac{u}{c} \quad \text{.....(1).}$$

Digitized by Google

Hence in the form

$$x = A\cos\theta - B\sin\theta,$$

$$A = r\left[\cos\phi - \frac{(n+1)c^2 - nu^2}{cl(n+1)}\sin\phi\right] = \rho\cos\psi \quad\text{.....(2)},$$

$$B = \frac{ur}{c}\left[\frac{c}{l(n+1)}\cos\phi + \sin\phi\right] = \rho\sin\psi \quad\text{.....(3)},$$

ρ being the radius and ψ the angular advance of the equivalent eccentric so that

$$\rho = \sqrt{A^2 + B^2}$$

and the numerical value of $\tan\psi$ is found from

$$\tan\psi = \frac{B}{A}.$$

Example. In the London and North Western gear, Figs. 108 and 110,

$$c = 8'',$$
$$l = 48'',$$
$$r = 2\tfrac{3}{4}''.$$

$\phi = 108$ degrees, so that $\cos\phi = -0{\cdot}31$, $\sin\phi = 0{\cdot}951$. The value of n has been calculated in Article 102 for this engine, and is $0{\cdot}514$.

Assuming $u = 4\tfrac{1}{2}$ inches, expressions (2) and (3) above reduce to

$$A = -1{\cdot}26,$$
$$B = 1{\cdot}42,$$

so that

$$x = -1{\cdot}26\cos\theta - 1{\cdot}42\sin\theta$$

for this particular value of u.

The radius of the equivalent eccentric is

$$\rho = \sqrt{1{\cdot}59^2 + 1{\cdot}42^2} = 1{\cdot}9,$$

and the numerical value of $\tan\psi$ is

$$\frac{1{\cdot}42}{1{\cdot}26} = 1{\cdot}126.$$

The corresponding angle is $48°\ 24'$: the value of ψ is therefore $180° - 48°\ 24' = 131°\ 36'$.

Corresponding calculations must be made for each separate value of u. The equivalent eccentric may however be found by a geometrical

Digitized by Google

process depending upon the fact that the locus of the end of the equivalent eccentric radii is a parabola, which for all practical purposes may be replaced by an arc of a circle passing through the three points fixed by

$$u = 0,\ u = c, \text{ and } u = -c.$$

When $u = 0$,

$$A_0 = r\left(\cos\phi - \frac{c}{l}\sin\phi\right) \quad \text{.....(4)},$$

$$B_0 = 0.$$

When $u = \pm c$,

$$A_1 = r\left(\cos\phi - \frac{c}{l(n+1)}\sin\phi\right),$$

$$B_1 = \pm r\left(\frac{c}{l(n+1)}\cos\phi + \sin\phi\right) \quad \text{.....(5)}.$$

Let Oa_0, Fig. 115, represent the value of A_0, Oa_1 the value A_1, a_1b_1 the positive value of B_1 and a_1b_2 the negative value of B_1.

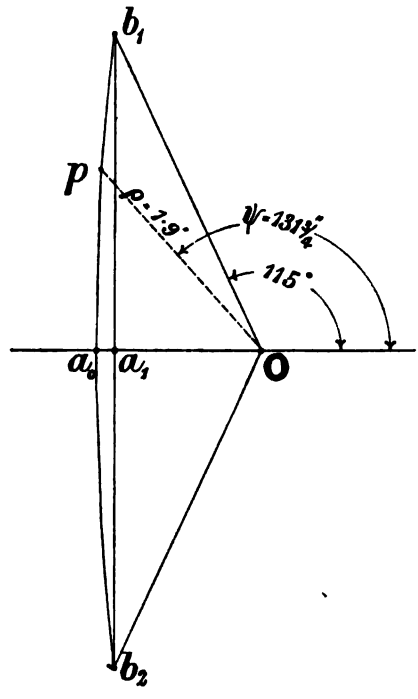

Fig. 115. Allan Gear. Equivalent Eccentric.

Digitized by Google

The problem is now to find the radius, R, of a circle passing through the points $b_1 a_0 b_2$.

The relation $$2R \times a_0 a_1 = (a_1 b_1)^2$$

may be used for this purpose.

$$a_0 a_1 = A_0 - A_1 = \frac{rcn}{l(n+1)} \sin \phi,$$

$$a_1 b_1 = B = \pm r \left(\frac{c}{l(n+1)} \cos \phi + \sin \phi \right),$$

$$\therefore \; R = \frac{r \{\sin \phi + m \cos \phi\}^2}{q \sin \phi} \quad \text{.....(6)},$$

where $$m = \frac{c}{l(n+1)},$$

$$q = \frac{2cn}{l(n+1)}.$$

To draw the locus, therefore, find the point a_0 by calculating the value of A_0. Then calculate the value of R from (6) and draw the arc through the point a_0. The values of B_1 set out above and below the centre line will then fix the extreme points on the locus $b_1 b_2$. Then for any given position of P in the link, the end of the equivalent eccentric p, divides the arc $b_1 b_2$ in the same proportion that P divides the link.

Example. Taking the data of the previous Example,

$$m = 0{\cdot}11,$$

$$q = 0{\cdot}113.$$

From (6) $R = 24{\cdot}8$ inches.

From (5) $B_1 = 2{\cdot}52$ inches.

From (4) $A_0 = -1{\cdot}29$ inches.

The arc corresponding to these quantities is shown in Fig. 115 by $b_1 a_0 b_2$.

The equivalent eccentric op is drawn for the value $u = +4\frac{1}{2}''$. The point p is taken so that $a_0 p$ represents $4\frac{1}{2}''$ on the same scale that $a_0 b_1$ represents $8''$. From this by measurement

$$\rho = 1{\cdot}9 \text{ inches},$$

$$\psi = 131\tfrac{3}{4} \text{ degrees}.$$

Digitized by Google

These values are practically the same as those found for the equivalent eccentric in the previous example.

The displacement curve corresponding to these values is chain dotted in Fig. 110, from which the difference between the actual curve and the curve obtained by means of the approximate theory can be seen.

105. The design of the Allan gear. This is carried out in much the same way as for the Stephenson link motion, the steps being as follows:—

(1) Make a preliminary drawing of the gear fixing thereby the length of the link $2c$, the length of the eccentric rods l, the length of the valve rod a, and the maximum value of u.

(2) Calculate the ratio between the lengths of the arms of the weight-bar shaft, first computing n from equation (3) of Article 102 and then using n in equation (5) of the same Article.

(3) Neglect the effect of the obliquity of the connecting rod and assuming suitable values for the cut off, lead, and maximum opening for steam, in full gear, find the equivalent eccentric ρ, ψ and the steam lap say by the Bilgram diagram.

(4) From Article 104, equations (2) and (3),

$$\rho \cos \psi = A = r \left\{ \cos \phi - \left(\frac{(n+1)\, c^2 - nu^2}{cl\,(n+1)} \right) \sin \phi \right\} \quad \text{.....(1)},$$

$$\rho \sin \psi = B = \frac{ru}{c} \left\{ \frac{c}{l\,(n+1)} \cos \phi + \sin \phi \right\} \quad \text{.....(2)},$$

a pair of simultaneous equations in r, the eccentricity of the actual eccentrics, and ϕ their respective angular advances.

Let
$$\frac{(n+1)\, c^2 - nu^2}{cl\,(n+1)} = p,$$

$$\frac{c}{l\,(n+1)} = m,$$

$$\frac{u}{c} = v.$$

Divide (1) by (2) and solve the resulting equation for obtaining

$$\cot \phi = \left\{ \frac{p + v \cot \psi}{1 - mv \cot \psi} \right\} \quad \text{.....(3)},$$

from which ϕ can be calculated.

Digitized by Google

When this is known r can be calculated from either (1) or (2).

If the actual eccentrics are made with the eccentricity r and set with respective angular advances $+\phi$ and $-\phi$ the gear will give approximately the distribution specified in full gear. What the actual distribution will be for full gear must then be found by drawing the actual displacement curves.

If the line of stroke of the piston is inclined to the line of stroke of the valve, an angle α say, as for instance in Fig. 108, the angles at which the eccentrics are to be set on the crank shaft will be

Positive eccentric sheave (forward) $\phi - \alpha$,

Negative eccentric sheave (backward) $\phi + \alpha$.

If the line of stroke of the piston is above the line of stroke of the valve the signs before α must be changed.

106. The Velocity of the valve of a link motion. The velocity of the valve can be found for a given crank angle and value of u from the displacement curve by the geometrical method of Article 49. For any practical purpose however the velocity can be found with sufficient accuracy from the displacement equation in terms of the equivalent eccentric.

The displacement of the valve in all the gears considered can be expressed approximately by the equation

$$x = \rho \cos(\theta + \psi),$$

where ρ and ψ are respectively the eccentricity and angular advance of the equivalent eccentric, these quantities being calculated from the dimensions of the gear, and a particular value of u.

Then the velocity of the valve v is

$$v = \frac{dx}{dt} = -\rho \sin(\theta + \psi) \frac{d\theta}{dt},$$

and when the angular velocity $\frac{d\theta}{dt}$ is constant, it is equal to $2\pi n$, where n is the number of revolutions of the crank per second. Hence for a given speed

$$v = -\rho \sin(\theta + \psi)\, 2\pi n.$$

Be careful to express ρ in feet in order to get the result in feet per second.

Digitized by Google

In the case of a locomotive running at a given speed this expression for the velocity gives the speed of the valve relatively to the valve face.

107. Controlling mechanisms for reversing gears. Some of these have already been mentioned incidentally. It is proposed to conclude this chapter with a few articles specially devoted to this subject.

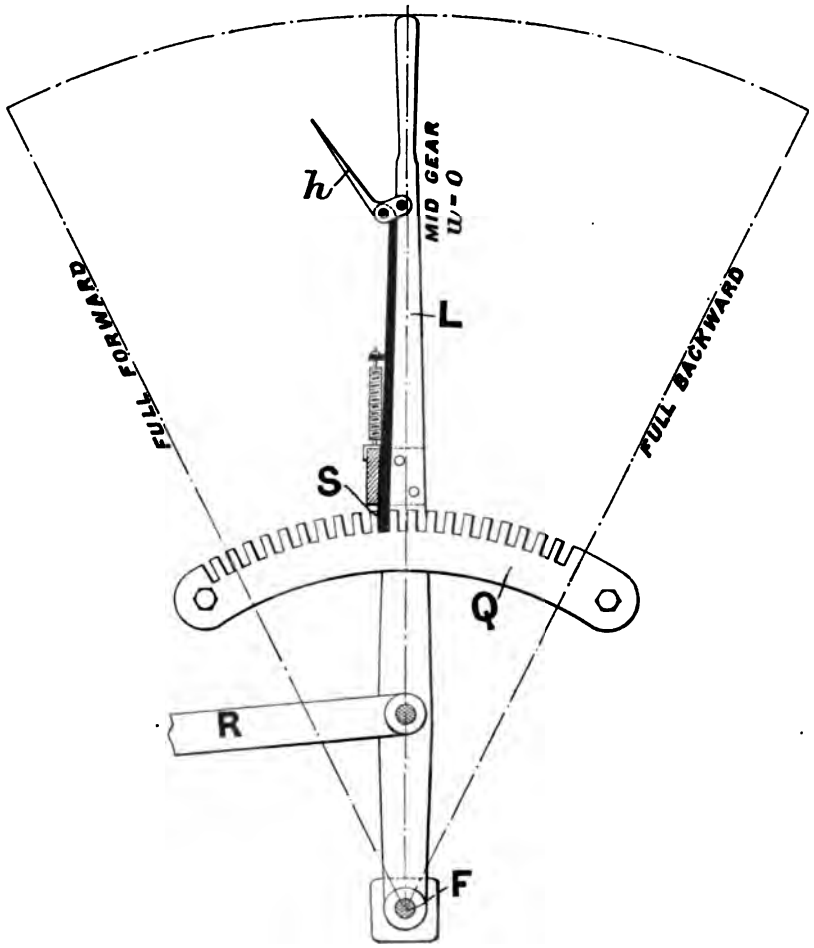

Fig. 116. Controlling Lever and Quadrant.

A controlling mechanism should fulfil two conditions. First, it should be able to hold the weigh-bar shaft securely locked in any one position. Secondly, it should allow the shaft to be moved quickly

Digitized by Google

from one position to another so that the engine may be reversed without delay.

The earliest form of mechanism used for this purpose with link motions is shown in Fig. 116. A lever L, having a fixed fulcrum pin at F, is connected with the reversing rod R. The lever is locked in any one of the positions corresponding to the notches shown on the fixed quadrant bar Q, by means of a spring catch S. By grasping the small handle h and the handle of L together the catch S is withdrawn from the notch and held clear of the quadrant, allowing the lever to be turned quickly into another position, where, on releasing the grip of the handle, the catch is forced into the notch by a spring. The central upright position of the lever corresponds to the central position of the block in the link. The extreme notches correspond to full forward and full backward gear respectively. In locomotives the gear is so arranged that the lever L is pointing over in the direction in which the engine is running. Each of the notches shown on the quadrant Q in Fig. 116 determines a definite position of the motion block in the link above or below the central position, that is to say, each notch corresponds to a positive or negative value of "u." The change from one notch to the next corresponds to a considerable change in the horse power of the engine as a rule. In order to obtain a finer graduation of power, and at the same time to retain substantially formed notches, two spring catches may be provided, both being connected to the rod controlled by the small handle h, but arranged on opposite sides of the lever L. The two bars, which bolted together form the quadrant bar Q between which the lever L moves, may then have the notches cut, so that those in the one bar are displaced relatively to those in the other bar through a distance equal to half the pitch of the notches. Then one or other of the catches will always be in, whilst the other will be out of gear. In this way the number of possible positions in which the lever may be locked is doubled for a given pitch of the notches.

As the reversing lever L is brought towards the centre from either of the extreme positions, the cut off is reduced, and the link motion is said to be "notched up," a term originating with this contrivance, but which has been extended to denote a reduction in the cut off with almost any kind of controlling gear.

The screw controlling gear shown in Fig. 117 is more powerful than, but cannot be so quickly handled as, the quadrant gear. There are two typical forms of this gear. In the one, the boss of the casting carrying the screw is provided with a circular plate, the circumference

Digitized by Google

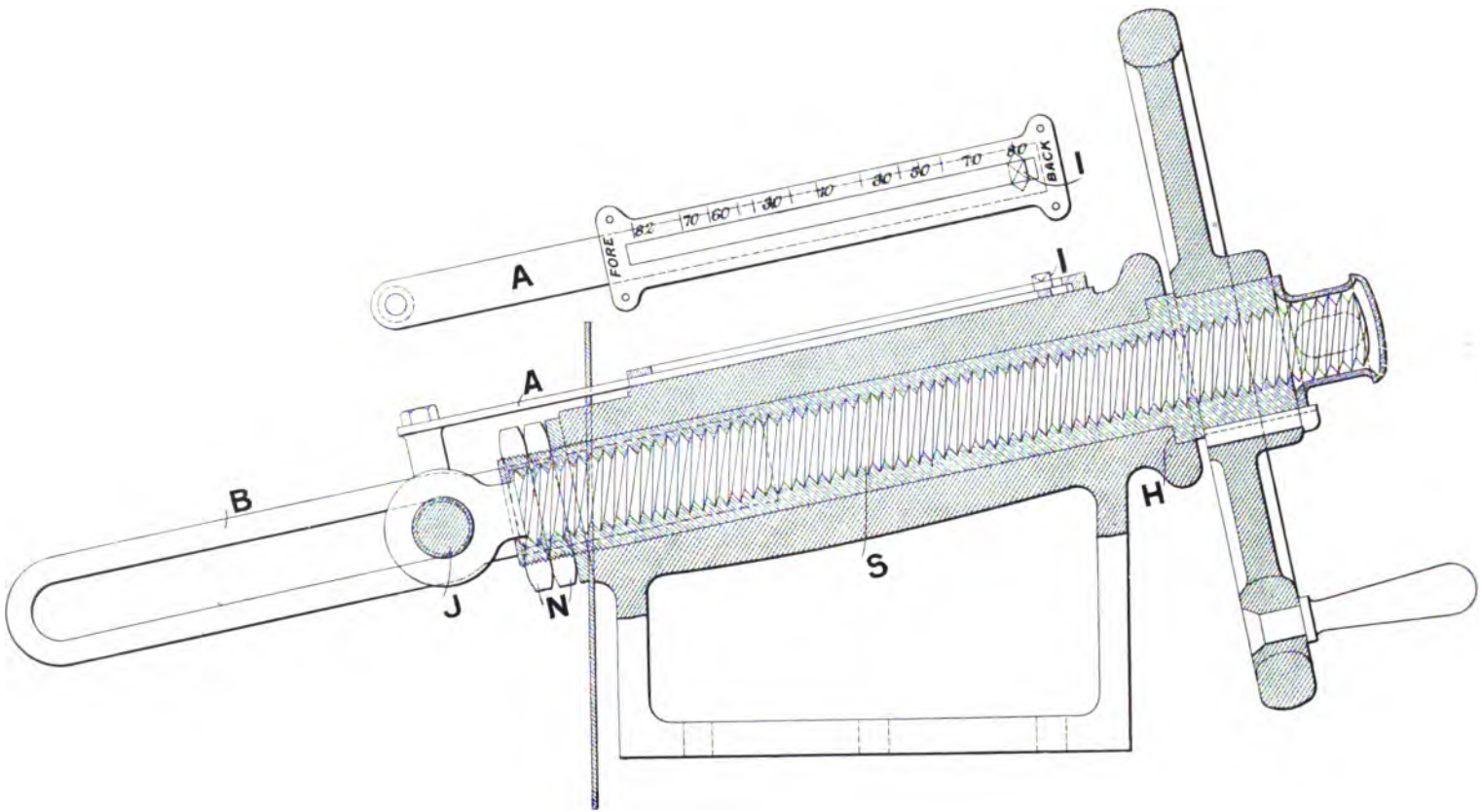

Fig. 117. Screw Controlling Gear.

Digitized by Google

of which is divided into notches, and a spring catch on the handle or wheel by means of which the screw is turned locks the gear in position. In the other type, the one shown in the figure, a long nut and screw are used and a special locking device is dispensed with. It will be seen from Fig. 117 that the nut is a long sleeve, turned on the outside to fit the main casting, and held from end motion by the lock nuts *N* at the one end and the shoulder *H* at the other end. The reversing wheel is keyed to the sleeve. The inside of the sleeve is screwed the whole way along to take the screw *S*, which is jointed to the reversing rod at *J*. The screw is 2 inches diameter, and is left hand, treble thread, and 1 inch pitch. The pin *J* is extended into the slot of the bar *B*, which is bolted to the side of the main casting. The slot therefore serves two purposes. It limits the extent to which the screw can travel out of the nut, and it holds the screw from turning. A small index *I*, carried by the flat bar *A*, travels over a graduated scale of "cut off" as the screw is moved in a nut. The cut off can be very finely graduated by this gear.

Power controlling gears are fitted to all large marine engines, and from time to time power reversing gears have made their appearance on locomotives, but have never been generally adopted, the screw or the lever and quadrant being almost universally used. Two of the most recent types of power reversing gears for locomotive work are described in the following articles, together with two well-known marine types.

108. Power reversing mechanism. Great Western Railway. A power reversing mechanism, which is used on some of the engines of the Great Western Railway, and which was designed by Mr Dean, is shown in Fig. 118. Two cylinders, *S* and *O*, are bolted to the inside of the engine frame, and the pistons corresponding to them are fixed to a common piston rod, *R*, connected by a link, *Q*, to an arm, *A*, forged with the weigh-bar shaft whose axis is *W*. The cylinder, *S*, is a steam cylinder, the entry and exit of steam to and from it being controlled by the plug valve *V*.

The second cylinder, *O*, contains oil, and it is fitted with a by-pass plug valve, *H*, which establishes or cuts off communication between the two compartments into which the piston divides the cylinder. When the valve *H* is open, the piston is free to move, the oil displaced from one compartment passing through the passage in the valve to the other compartment. When *H* is closed, this passage of oil cannot take place, and the piston is therefore locked in position.

The valves *H* and *V* are coupled together by a rod leading to

Digitized by Google

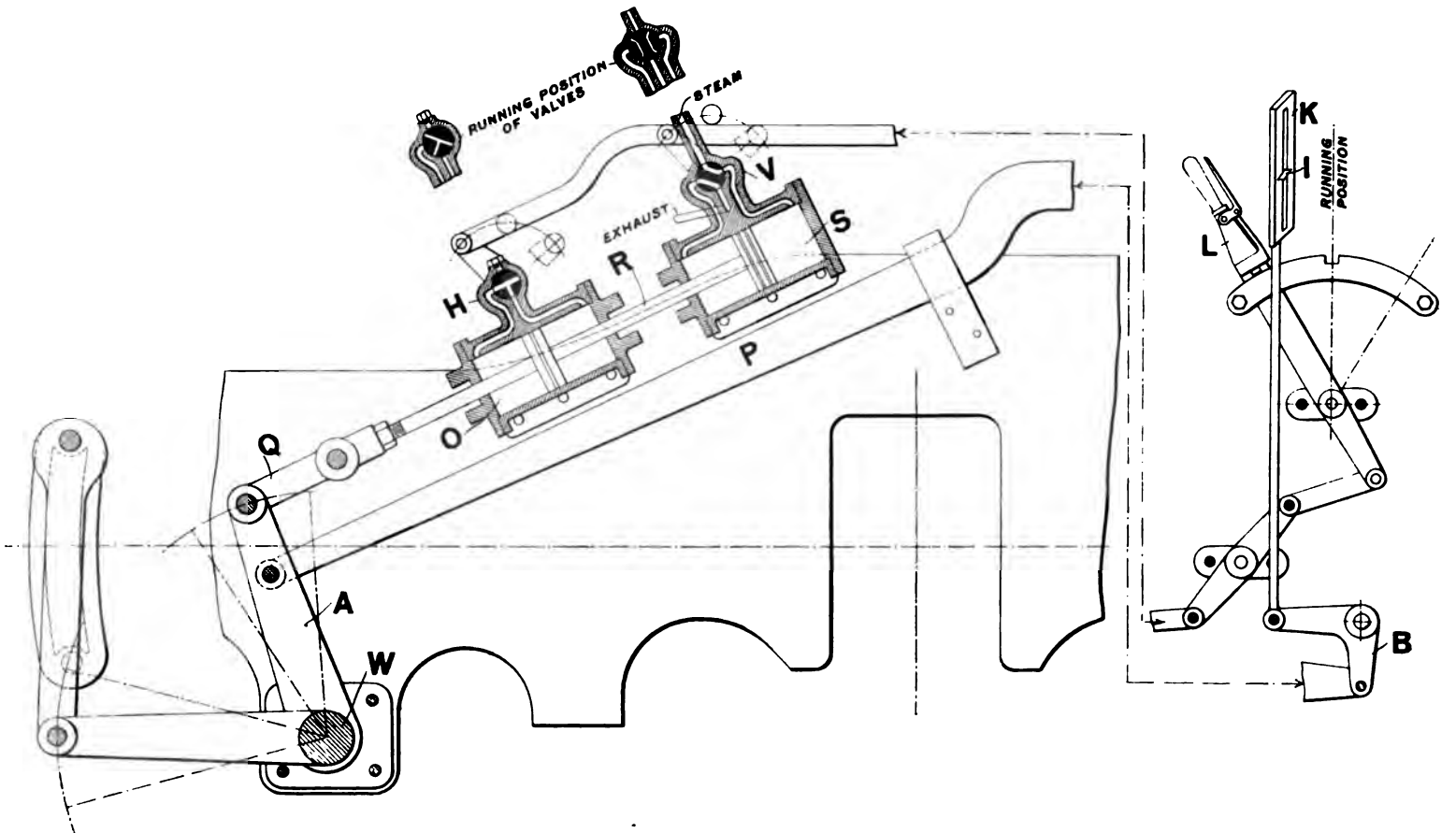

Fig. 118. Steam Controlling Gear. Great Western Railway.

Digitized by Google

a controlling lever L fixed in the cab. A rod P, jointed to the arm A, moves an index I, by means of the bell crank lever B. The scale K, over which the index moves, is fixed to the boiler front, and it is graduated for "cut off." When the index is at the middle of the scale the motion block is at the middle of the link.

The gear is shown in the position where steam is acting to push the piston S from its central position, corresponding to mid gear, so that the weigh-bar shaft is being turned in the direction of forward gear. Steam is passing through the valve, V, to the right-hand side of the piston, the left-hand side being open to the exhaust. The way is also free for the oil to pass from the left-hand compartment of the cylinder O, to the right, through the valve H. When the index I shows that the gear has the proper configuration for the cut off desired by the driver, the controlling handle L is brought to the centre of the quadrant, where it is held fast by the spring catch. This movement of L to the centre, sets the valves V and H in the way shown in the separate drawing of them above the main drawing, where the steam valve, V, is shut, and the by-pass valve H is closed, thus locking the piston O, and therefore the weigh-bar shaft. This central position of the lever L, and the corresponding positions of the valves, is the normal running configuration of the gear. To reduce the cut off in forward gear the lever L is pulled back to the right of the centre, thereby bringing the piston of S back towards its central position. It will be understood that the lever L does not correspond with a reversing lever of the usual type. It merely operates a steam valve, and has three positions, namely, the mid or running position, and the extreme positions in the quadrant corresponding to the steam valve being open to one or other end of the cylinder S. This gear works very well so long as the oil and the steam valve are kept perfectly tight. A leaky oil valve allows the piston to gradually creep away from a set position, the creep being accelerated if the steam valve leaks also.

109. Holden's combined hand and power reversing mechanism. In this gear, recently introduced on some of the locomotives of the Great Eastern Railway, the wheel and screw for hand reversing is retained, and extra gear is combined with it, for utilising power derived from the compressed air used for operating the Westinghouse brake. Either the hand or the power method can be used at will, and the act of using one automatically cuts the other out. A good idea of the apparatus will be formed from a consideration of the general arrangement shown in Fig. 119. The hand gear consists of the wheel A,

Digitized by Google

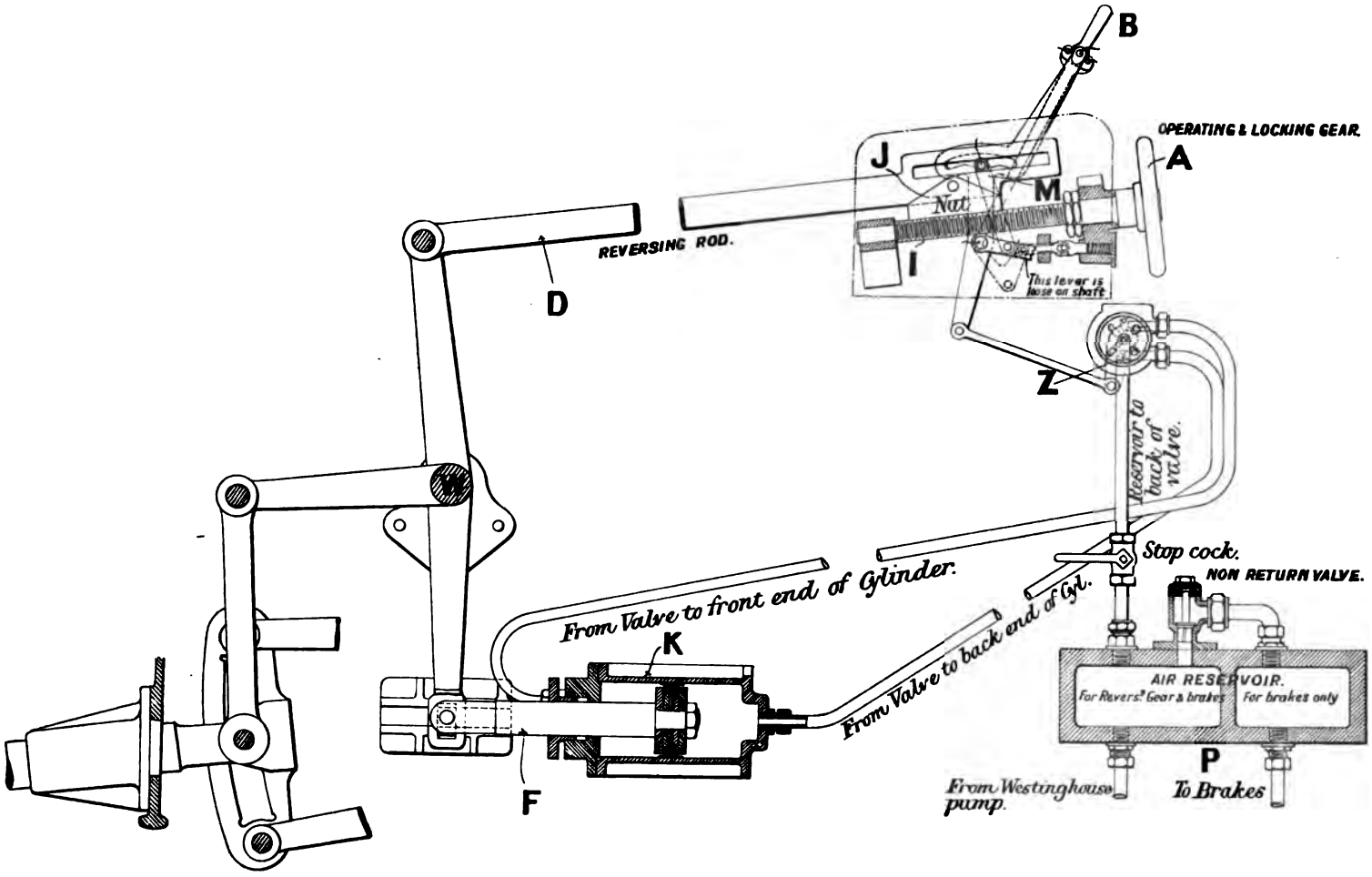

Fig. 119. Holden's Combined Hand and Power Controlling Gear.

Digitized by Google

connected to the screw *I*, which by means of the nut *J*, moves the reversing rod *D*, and through it the weigh-bar shaft *W*. The power gear consists of a cylinder *K* operated by compressed air from the reservoir *P*, which is kept charged by the air-pump used in connection with the Westinghouse brake. To reverse by power the handle *B* is used, and the turning of it controls the entrance and exit of air to and from the cylinder *K*, through the valve *Z*. The connection of the hand and power gear with one another is made by means of a cam *M* formed with the handle *B*. Immediately the handle *B* is moved, the cam *M* lifts the nut, or half nut rather, since the lower half is entirely cut away, clear away from the screw *I*, and then moves the valve *Z*, thereby distributing air to the cylinder *K*, so that the weigh-bar shaft is turned in a direction determined by the direction in which the handle *B* was originally moved. When the desired position of the shaft is obtained the handle is brought back to its central position, thereby gearing the half nut with the screw again. When running with *B* in its central position both ends of the cylinder *K* are in communication with the air reservoir *P*, through the valve *Z*. The piston rod *F* is designed so that the difference of areas between the two faces of the piston multiplied by the air pressure furnishes a force along the piston rod sufficient to balance the weight of the motion hanging from the suspension link *Q*. The half nut is prevented from jumping out during running by means of the ratchet *j* and pawl *r*.

110. The "all round" steam reversing apparatus. The principle of this apparatus is illustrated in Fig. 120, which shows the general arrangement in sufficient detail for the purpose of explaining the reversing mechanism fitted to the engines of some recent twin screw torpedo boats built by Messrs Yarrow and Co. for the British Government. Each of the two engines has four cylinders and four corresponding link motions. The handles, reversing wheel, etc., are arranged so that the link motions can be controlled by the engineer standing at one end of the engine.

Referring to Fig. 120, and considering one engine, the weigh-bar shaft *W* runs the whole length of the engine, and each of the four link motions is connected to it by a drag link, coupling the centre of the link *C* to the end *S* of a corresponding arm, keyed to the weigh-bar shaft. One drag link *G*, and the corresponding arm *WS*, on the weigh-bar shaft is shown in the figure.

The weigh-bar shaft has an arm *WQ*, keyed to it at about the middle of its length. (The arms *WS* and *WQ* are in different planes though they appear continuous in the figure.) Placed opposite to this

Digitized by Google

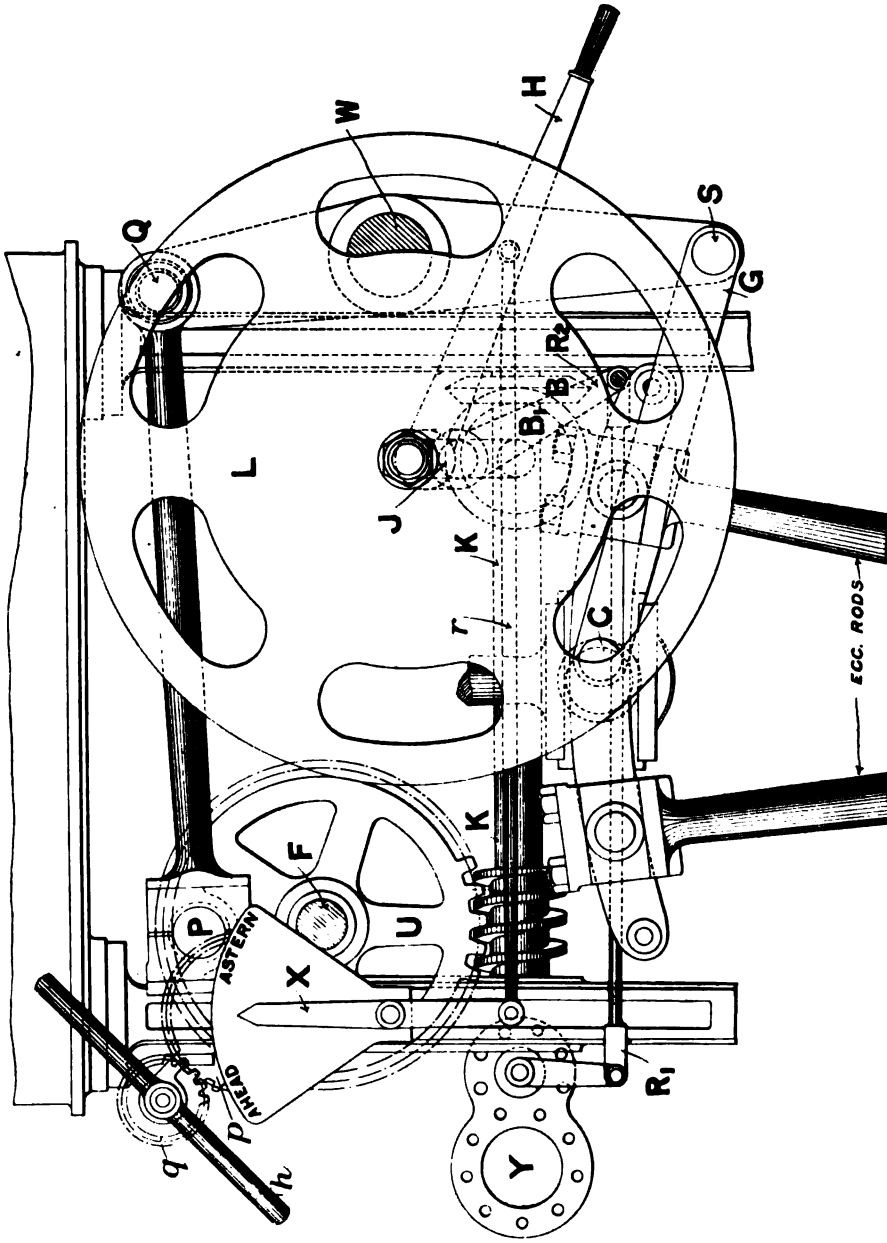

Fig. 120. The "All Round" Controlling Gear.

arm is a worm wheel U, carried on a shaft F which is supported in suitable bearings attached to the engine framework. A crank pin P in the worm wheel is coupled to the end of the arm WQ by the coupling

Digitized by Google

rod QP. A shaft KK placed across the engine, and supported in bearings attached to the frame, carries a worm, gearing with the wheel U; a crank (not seen in the figure) at the left end, which may be turned by a small steam engine, of which the back covers Y only are seen; and a bevel wheel B. A longitudinal shaft J, slightly inclined in the vertical plane, carries at one end a bevel wheel B_1 gearing with the wheel B, and at the other end a wheel L, which is heavy enough to act as a flywheel to the engine Y, and shaped so that it may be used as a hand wheel also.

A handle, H, operates the valve of the engine Y through rods and levers R_1, R_2, etc., at the same time moving the index X by means of the rod r. Thus the weigh-bar shaft may be turned either by turning the hand wheel L, or by admitting steam to the cylinder Y, the wheel L in the latter case simply revolving as a flywheel. If steam is admitted to Y continuously, the engine drives the worm wheel U continuously in one direction, whilst the end of the arm Q reciprocates to and fro, the length of the reciprocation being so arranged that the links are moved backwards and forwards between the extreme positions of full gear ahead and full gear astern.

It is not absolutely necessary therefore to provide the engine Y with reversing gear, but it is usually made reversing so that the links may be moved from a given position to any other position with the smallest possible angular motion of the worm wheel.

Reversal of Y is effected by turning the steam valve about its valve spindle by the handle H. The valve is cylindrical in form, and is provided with ports so that in one angular position on the spindle it works as an ordinary slide valve with outside steam admission and inside exhaust, but when turned into a second position about the valve spindle it works with inside steam admission and outside exhaust. In this way reversal is easily effected.

The method of reversal by the interchange of steam and exhaust passages is more fully discussed in Article 130 in connection with the steam steering engine. When the links have been brought into any desired position, the weigh-bar shaft is locked by clamping the worm wheel U against one of the vertical standards of the engine, by means of a T-headed bolt which passes through the standard, the T head lying in a suitably formed groove inside the rim of the worm wheel. The clamping is done by turning the handle h, which, by means of a longitudinal connecting shaft, turns the wheel q, which is in gear with the spur wheel p. The boss of p is screwed to form the nut of the T-headed bolt. The wheel p and the worm wheel U are of course on opposite sides of the column seen in the figure to the left.

Digitized by Google

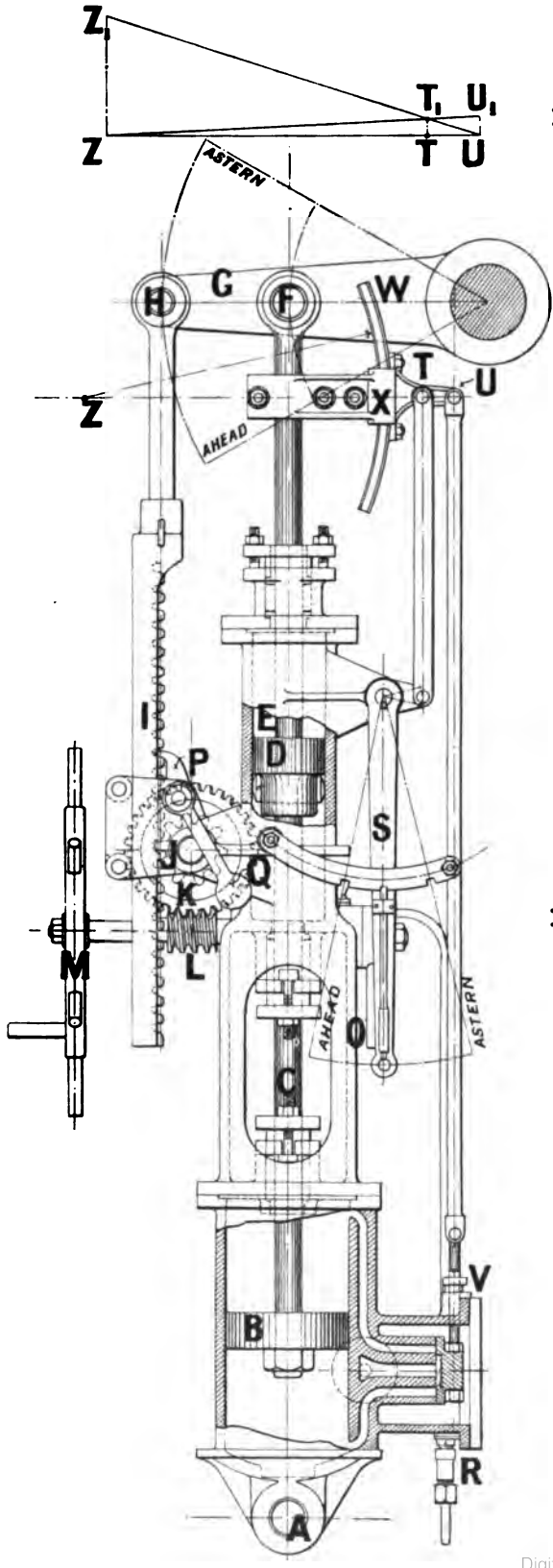

Fig. 122.

Fig. 121.

THE BROWN STEAM CONTROLLING GEAR.

Digitized by Google

A model of the "all round apparatus" can be seen at the South Kensington Museum fitted to the model of the engines of the S.S. *Flamboro.* In this case the engines are worked from the front and the design of the gear is modified accordingly.

111. **Brown's power reversing mechanism,** Fig. 121. The piston rod *C*, of a cylinder, continued through a small hydraulic cylinder *E*, is coupled directly to the arm of the weigh-bar shaft at *F*. The joint *F* must therefore move in a circular arc, and the necessary angular freedom is obtained by connecting the main casting of the mechanism to the frame of the main engines by a single pin joint *A*. When steam is admitted into the cylinder the piston rod pushes or pulls the weigh-bar shaft into a new angular position, the speed being limited by means of the hydraulic cylinder *E*. A block piston *D* is cottered to the piston rod and a small hole is drilled through it, and, the cylinder being filled with water, every movement of the piston rod is accompanied by a transference of water from one side to the other of the piston *D* through the small hole, the hydraulic resistance to this transference acting as a brake. The cylinder is kept filled with water in an ingenious way. The water which collects in the bottom of the valve chest is forced by the steam pressure in the chest through the non-return valve *R*, and into the hydraulic cylinder which is connected to *R* by a small copper pipe, which can be seen in the figure.

The interesting feature of the gear, however, is the way the position of the piston in the cylinder, and therefore the angular position of the weigh-bar shaft, is controlled by the reversing lever, the piston starting to move when the lever is moved in the quadrant, and continuing to move until it stops in a position which places the weigh bar in the definite angular position corresponding with the notch in the quadrant to which the reversing lever is moved.

The mechanism for doing this is simple. An arm *X* is bolted rigidly to the piston rod. The end of this arm is grooved to the curve of the bar *W*, which can move easily up or down through the groove. The curved bar carries a shank *TU*, so that *U-T-W* is one piece. The valve rod is jointed with this piece at *U*, and the bell crank end of the reversing lever is connected to it at *T*. Consider the motion of the piece *U-T-W* relatively to the arm *X*. When it is pushed up or down, the curved part *W* is compelled to slide in the slot, and the motion of the points *T* and *U* is the same as though they were points on a bar centred at the centre of curvature *Z* of the piece *W*, as indicated in Fig. 121 and above in Fig. 122. So that in considering the motion

Digitized by Google

of the piece U-T-W, so far as the motion of the points T and U are concerned, the actual mechanism may be replaced by a bar, carried on a centre Z formed in the arm X, the arm of course being supposed extended to the left for this purpose. The valve is set so that when Z-T-U is horizontal the piston is at the centre of its stroke and the valve is in its central position, so that no steam can get into the cylinder.

Suppose now that the reversing lever is pulled into the astern position. The point T is moved upward to T_1, as indicated in the centre line drawing of the bar, Fig. 122, the bar turning about the centre Z, and hence the point U is moved upwards to U_1, causing the valve to open the lower port of the cylinder. Steam is admitted and the piston at once begins to move up, but in doing so it carries the point Z upward also, the bar now turning about T_1 as a fixed point, and when Z arrives at Z_1 the point U_1 has moved downwards to its original position, thus bringing the valve back to the central position and shutting off the steam. The distance moved through by the piston depends upon the amount of the vertical movement originally given to T, and this depends upon the angle through which the reversing lever is turned. Hence if the quadrant is divided up into notches, the movement of the reversing lever from one notch to another corresponds to a definite vertical movement of the piston, and to a definite angular position of the weigh-bar shaft. It will be seen from the drawing that the end of the weigh-bar shaft carries a rack I, gearing with a pinion J, the shaft of which carries a worm wheel K, operated by a worm L, which is keyed to a shaft on which the hand wheel M is fastened. When steam control is used the worm is thrown out of gear with the wheel by means of a cam. By throwing this cam in, the engine can be reversed by hand. A locking arrangement is provided so that the main engines can be linked up to, and locked in, any position in the ahead gear. A pawl P, weighted to disengage automatically by the weight Q, may be thrown into gear with the rack, where it is held in gear by the downward pull of the piston, a pull which is always maintained by setting the slide valve so that it stands slightly open in ahead gear.

Digitized by Google

CHAPTER VIII.

WALSCHAERT GEAR. RADIAL GEARS.

112. Resolution of the valve displacement curve into two components. The actual motion which the slide valve receives from the eccentric of a simple valve gear may be resolved into two component motions, which motions may be considered as derived from eccentric cranks which are themselves components of the eccentric which produces the actual motion.

The case of most practical interest is that where the eccentric crank is resolved into two components respectively at right angles to, and at 180 degrees with, the main crank, it being understood that if the line of stroke of the valve is inclined to the line of stroke of the piston the two are brought into coincidence before beginning the resolution.

In Fig. 123, Od is the 180 degree component, and Oh is the 90 degree component, of the eccentric Oa. The corresponding component displacement curves are shown in Fig. 124 together with the resultant displacement curve due to the eccentric Oa. Points on the curves are obtained by projecting the successive positions occupied by the points h, a and d, as the crank is placed in different positions.

In the diagram, any horizontal distance O_1a_1, measured to the resultant curve, is equal to the algebraical sum of the components, O_1d_1 and O_1h_1.

Neglecting the effect due to the obliquity of the eccentric rods, the displacement curve corresponding to the component eccentric Od is a cosine curve whose maximum ordinate is

$$Od = r \cos \phi = A,$$

and points on the curve may be calculated from

$$x = A \cos (\theta + 180) = - A \cos \theta.$$

The displacement curve corresponding to the component eccentric Oh is a sine curve whose maximum ordinate is

$$Oh = r \sin \phi = B,$$

Digitized by Google

and points on the curve may be calculated from

$$x = -B \sin \theta.$$

It should be carefully borne in mind that the quantity A is the displacement of the valve from its central position when $\theta = 0$ degrees and is therefore equal to the steam lap plus the lead: and that B is the displacement of the valve when $\theta = 90$ degrees.

If the angular advance is changed to an equal negative value in order to obtain negative rotation of the crank, the 180 degree, or the A component, as it may be called, remains unchanged, whilst the 90 degree, or B component, changes its sign. This will be seen at once from Fig. 123 where Ob represents the eccentric when ϕ is changed to a negative value, and Od and Og are the respective A and B components. The B component may now be conveniently described as the 270 degrees component, or -90 degrees component. The sine curve corresponding to the negative value of B is shown with fine dots and the resultant curve due to Ob, or what is the same thing, the combination of the A component curve with the dotted curve, is shown with thick dots.

Thus the combination of the A component curve with a 90 degree component curve determines a displacement curve which will effect a distribution of the steam causing positive rotation: and the combination of A with a 270 degree component will give a curve which determines negative rotation.

If A, still constant in value, be combined with either a 90 or 270 degree component of smaller maximum value, the resulting displacement curve will have a smaller maximum value and will determine cut off in each case sooner in the stroke.

There are two limiting cases, first when $B = 0$, secondly when $A = 0$. When $B = 0$ the distribution must be effected by the A component alone and it will be recognised that this corresponds to a mid-gear distribution of the link motion, where the cut off is so excessively early that the distribution of steam cannot work the engine against a load. When $A = 0$, a steam distribution is only possible if the valve has no steam lap and works without lead, the corresponding indicator diagram being a rectangle.

With a fixed value of A and a value of B varying between a positive and a negative maximum, families of displacement curves are obtained which determine various cut offs.

The family of curves, Fig. 86, illustrate this point. Each curve may be looked upon as the combination of an approximately constant A curve, the displacement curve at mid-gear, with a B curve whose

Digitized by Google

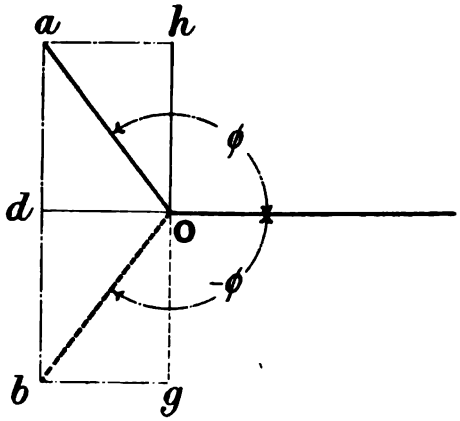

Fig. 123.

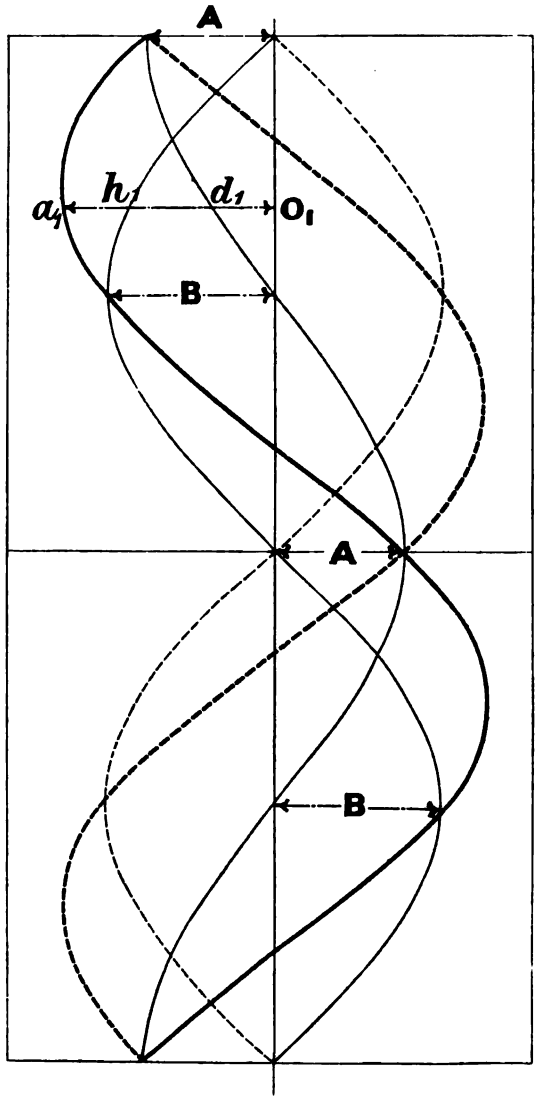

Fig. 124.

ANALYSIS OF A VALVE DISPLACEMENT CURVE INTO TWO COMPONENT CURVES.

Digitized by Google

maximum value is proportional to the quantity u, where of course u ranges between a positive and negative maximum value.

This principle of combining two displacement curves may be extended to include the combination of any pair of periodic curves roughly following the shape of sine and cosine curves whose values are a maximum and zero respectively both when the crank angle is 0 and when it is 180 degrees.

Thus, any periodic curve of the general shape of a cosine curve whose maximum value is A (the lap plus the lead), when the crank angle is 0 or 180 degrees, may be combined with a curve of the same period, the general shape following a sine curve whose value is zero when the crank is 0 or 180 degrees, to give a resultant curve which will represent the movement of a slide valve capable of producing a distribution of steam which will drive the engine.

113. The reversing gear known either as the Heusinger von Waldegg or the Walschaert gear. This is a gear, Fig. 125, constructed on the principles discussed in the previous article. The 180 degree, or A component, of the valve motion, which it will be remembered is 180 degrees from angular agreement with the crank, is obtained by means of a lever VJD, connected to the valve spindle at V, and to the crosshead at D. In the usual arrangement of the gear the point V is compelled to move in a straight line by substantial guides, consequently the connection between the end D and the crosshead must either be slotted, or the link DH may be interposed to allow a small amount of vertical freedom to D as it swings about the point V. The point J must be so chosen that, considering it to be a fulcrum, at rest, the maximum movement of V to the right or left of its central position is equal to the steam lap plus the lead. The lever VJD thus has two functions: one, the reversal of the motion of the crosshead so that the motion of V is equivalent to the motion it would receive from a crank placed at 180 degrees with the main crank; this is secured by placing the point J between V and D: the other, the reduction of the stroke of the crosshead to the amount $2A$, which is accomplished by properly choosing the position of the point J in relation to the points V and D.

The 90 degree component of the valve motion is obtained by connecting the fulcrum J to a link Ee, curved to the radius of the valve rod JP, and driven by a single eccentric sheave so placed with regard to the crank that the link Ee passes through the position where J is its centre of curvature, at the instants when the crank is passing through either of the dead point positions, namely 0 degrees or

Digitized by Google

180 degrees. The angular position of the sheave is in consequence + 90 or − 90 degrees with the main crank if F is on the line of stroke of the piston, but if for constructive reasons it is found convenient to place F nearer to Q, the angle is slightly changed. The point Q, about which the link oscillates, is a fixed axis, hence, when the point P is brought into coincidence with Q, by the turning of the weigh-bar shaft whose fixed axis is at W, J receives no motion from the link, that is $B = 0$, and the motion is in mid-gear.

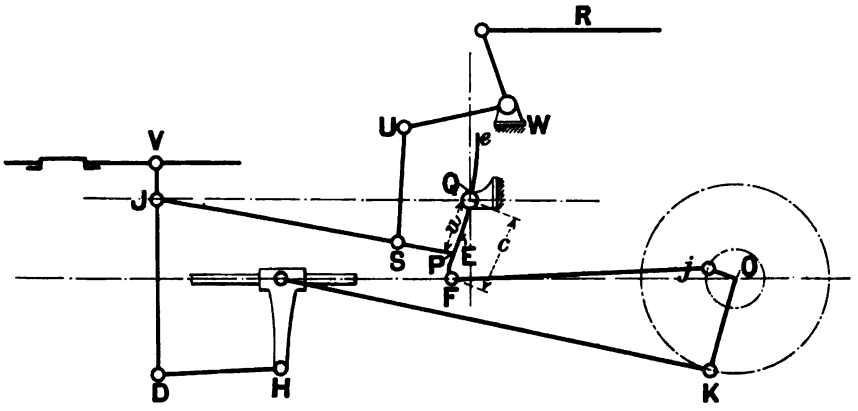

Fig. 125. WALSCHAERT VALVE GEAR.

Variation of the value and sign of B is obtained by placing the point P in a position either above or below the fixed axis Q. The position is controlled by the suspending link SU and the weigh-bar shaft.

Which half of the link will determine the sign of B for positive rotation (forward running) depends upon which end of the link is connected to the eccentric sheave, and again, whether the eccentric sheave is 90 degrees approximately, in front of, or behind the crank. To ascertain which is the half for positive rotation in any given case with outside steam admission, imagine the crank placed at 0 degrees, and then to be turned slightly in the positive direction. Then that half of the link will determine positive rotation which moves away to the left of the vertical centre line.

The radius of the eccentric sheave Oj must be so chosen, that the motion V receives through the link Ee and the lever DJV, D being now the fulcrum about which the lever turns, has a stroke equal to $2B$ when P is at its greatest distance either above or below Q, B itself having the value corresponding to full gear.

Digitized by Google

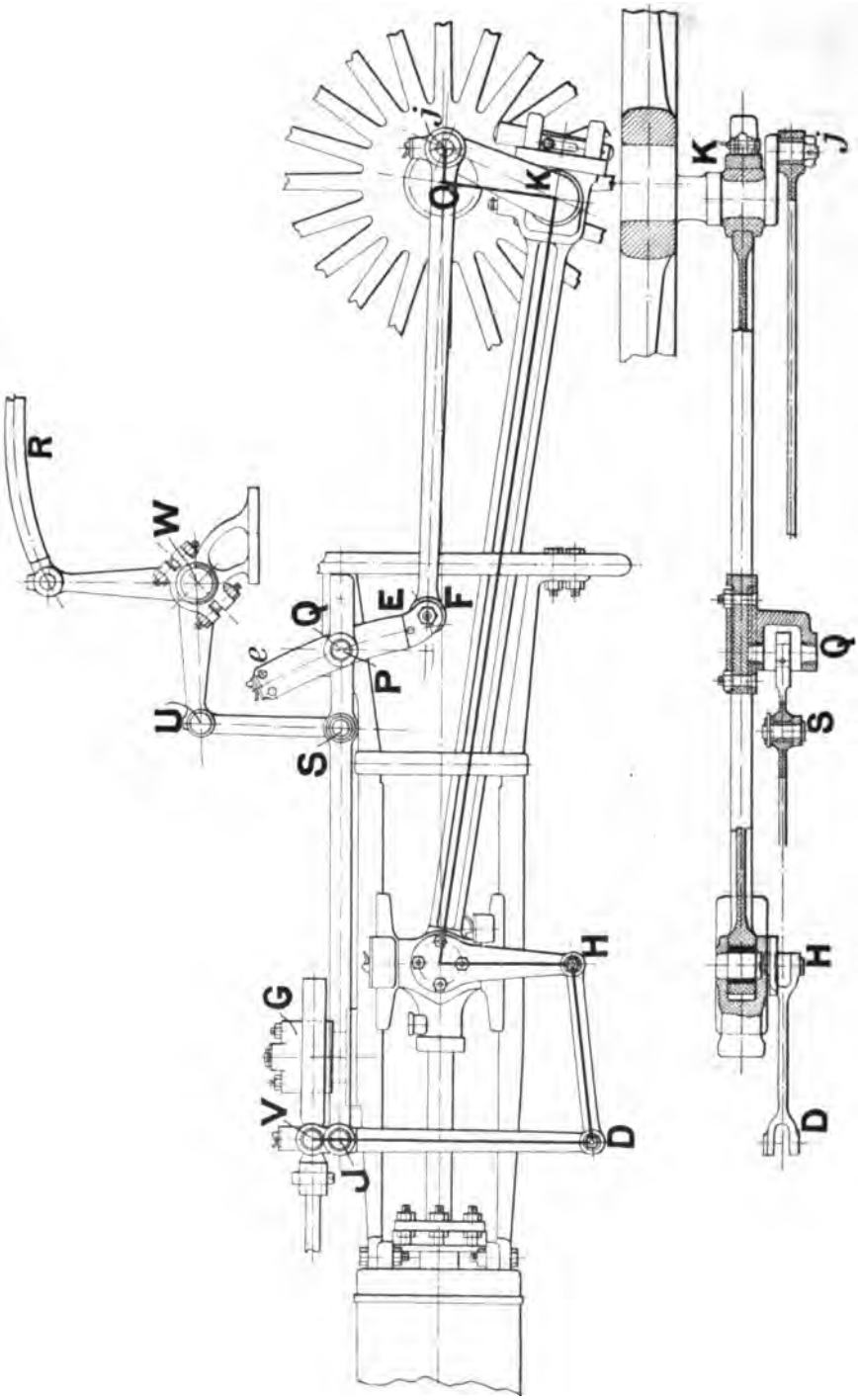

Fig. 126. Walschaert Gear for the High Pressure Cylinder of the De Glehn Compound. Northern Railway of France.

Digitized by Google

Thus the link *Ee* has two functions, one, the changing of the sign of *B*, which is brought about by placing *P* either above or below *Q*; the other, the changing of the magnitude of *B*, which is accomplished by holding *P* at a definite distance from the fixed centre *Q* by the weigh-bar shaft gear.

When the crank is at 0 or 180 degrees the valve will be open by the amount of the lead. In order that the lead may remain constant, whilst the gear is changed from full forward to full backward, the point *J* must remain at rest whilst this change in the configuration takes place. This condition is secured by curving the link *Ee* to the radius *JP*. The initial geometrical problem in connection with the design of all reversing gears is thus exactly fulfilled. The distinguishing characteristics of this gear are therefore that the lead is constant for all positions of *P* in the link *Ee*, and that only one eccentric sheave is required.

114. Walschaert gears, Northern of France Railway, and Belfast and Northern Counties Railway. The good record of the De Glehn four cylinder compounds on the Northern Railway of France in connection with the express service between Paris and Calais is well known in this country. It is interesting to notice that the De Glehn compounds are fitted with the Walschaert gear for both the inside and outside cylinders, the general arrangement of the gear for the outside cylinders being shown in Fig. 126 and for the inside cylinders in Fig. 127.

Both drawings are lettered similarly with the centre line sketch, Fig. 125, so that there will be no difficulty in following the several parts. It will be observed that the eccentric sheave giving the 90 degree component, has been replaced by a return crank in the case of the outside gear, Fig. 126. This is the usual arrangement when the gear is applied to outside cylinder engines.

Another point to notice is, that the return crank, though equivalent to an eccentric placed at 90 degrees with the crank, is connected by its eccentric rod to the lower end of the link *Ee*, so that the lower half of the link determines positive rotation. Therefore *u* is to be considered negative when measured from *Q*, upwards, and positive when measured from *Q* downwards.

The valve spindle is constrained to move in a straight line by the guide *G*, which is fixed to the slide bar.

The slide valve worked by this gear is of the balanced type and has already been illustrated in Fig. 16.

The gear for the inside cylinders, Fig. 127, is generally similar in

Digitized by Google

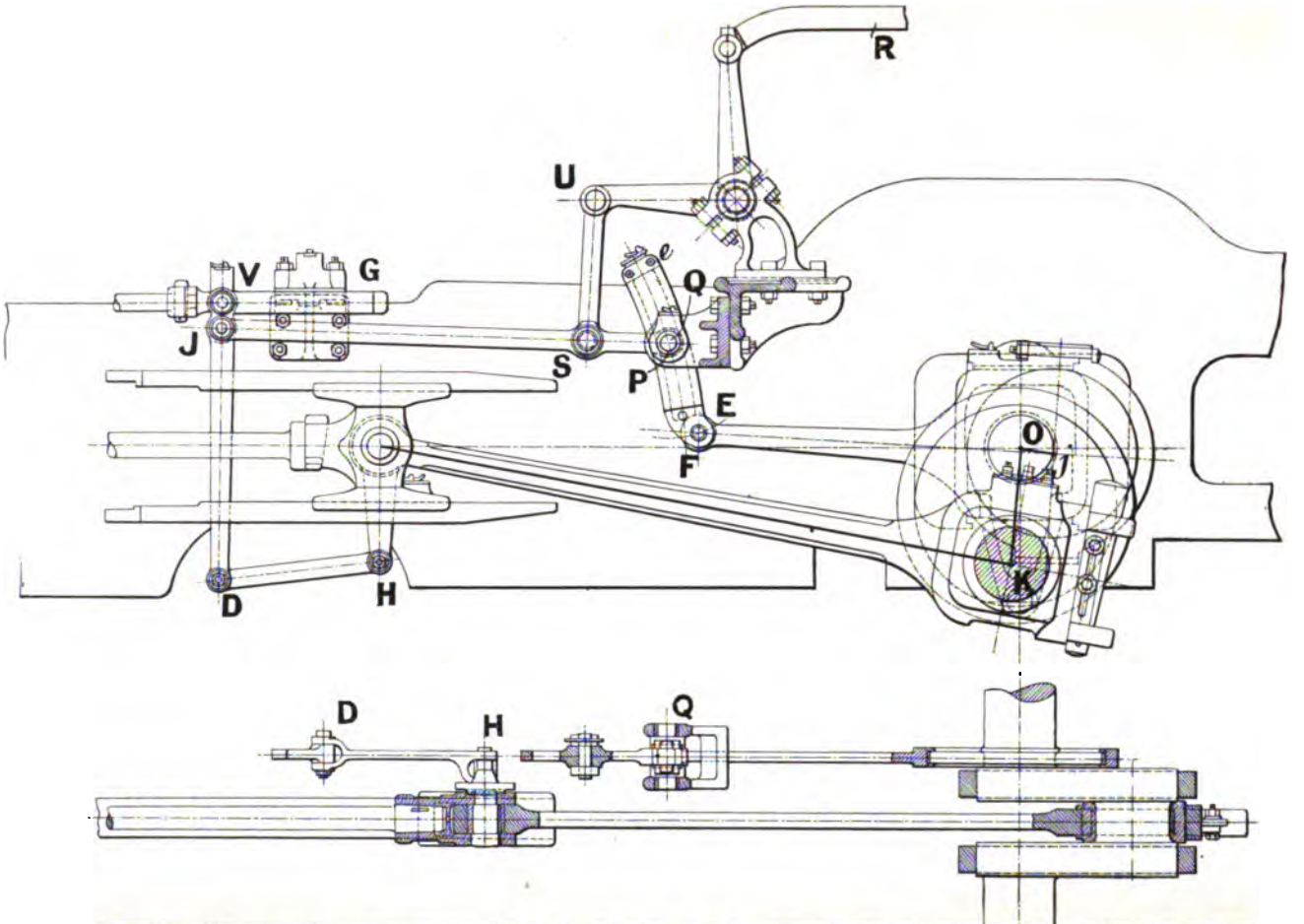

Fig. 127. WALSCHAERT GEAR FOR THE LOW PRESSURE CYLINDER. DE GLEHN COMPOUND. NORTHERN RAILWAY OF FRANCE.

Digitized by Google

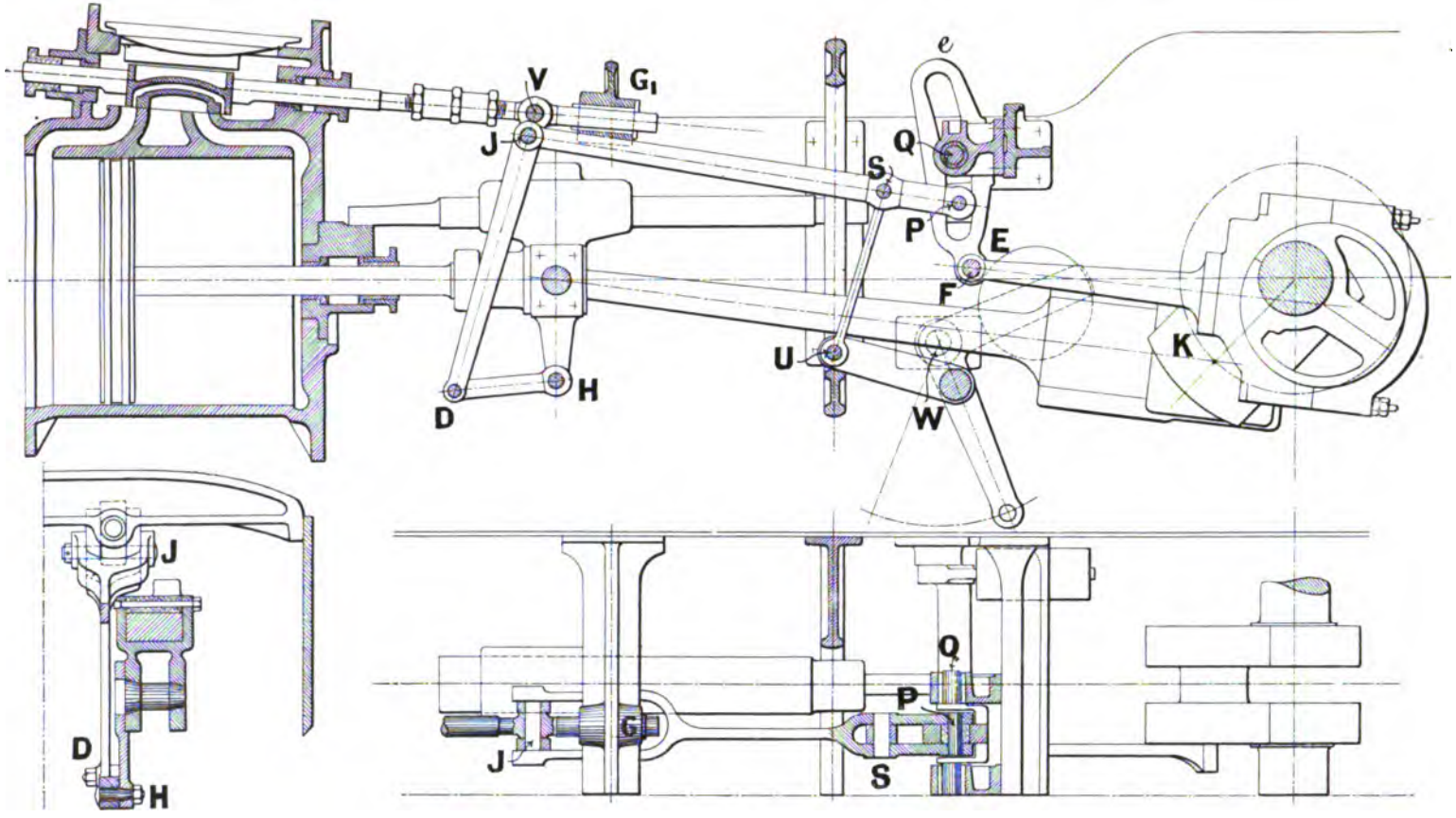

Fig. 128. Walschaert Gear. Belfast and Northern Counties Railway.

Digitized by Google

design to that for the outside cylinders. An eccentric sheave drives the link, being coupled by its eccentric rod so that the lower half determines positive rotation. The bracket guiding the valve spindle is bolted to the engine frame. I am indebted to Mr Bosquet of the Northern Railway of France for the drawings from which Figs. 126, 127, 16 and Fig. 132 below have been prepared.

Fig. 128 shows the arrangement of the Walschaert gear used by Mr Malcolm on some inside cylinder four coupled locomotives, belonging to the Belfast and Northern Counties Railway. It will be noticed that the centre line of the cylinder is inclined to the line of stroke of the valve. The general arrangement of the parts can easily be made out from the drawing.

The Walschaert gear is extensively used in locomotive practice on the Continent, in fact it is so rapidly displacing the link motion there that it may be considered the standard form of reversing gear for locomotive work.

It has been used to a limited extent on marine engines, Messrs Denny of Dumbarton having fitted a modification of it, designed by Mr Walter Brock, to about 70 sets of engines, including those of the *Dover*, *Calais*, *Lord Warden* and other vessels which are running on the cross channel and other services. A fine model of the engines of the *Princess Henriette* fitted with this gear can be seen in the South Kensington Museum.

115. Walschaert gear continued. Valve displacement curves of the high pressure gear fitted to the Northern Railway of France engine illustrated in Fig. 126. The symbol u means, in connection with this gear, the distance between the points P and Q when the crank is in the zero position, u being reckoned positive when it is measured from Q, downwards, and negative when measured from Q, upwards.

A set of displacement curves for values of u,

$6{\cdot}1'' = 155$ mm., $4\frac{1}{2}'' = 114$ mm., $3'' = 76$ mm., $1\frac{1}{2}'' = 38$ mm.,

zero,

$-6{\cdot}1'' = -155$ mm., $-4\frac{1}{2}'' = -114$ mm., $-3'' = -76$ mm., $-1\frac{1}{2}'' = 38$ mm.,

is shown in Fig. 129 together with the piston displacement curve and the lap lines, the combination forming the valve diagram for the gear. In this case there is negative inside lap so that the points of release, marked generally by the letter r, and the points of compression, marked generally by the letter k, do not fall on the vertical centre line of the diagram. It will be seen from the diagram that the lead is constant for all values of u.

Digitized by Google

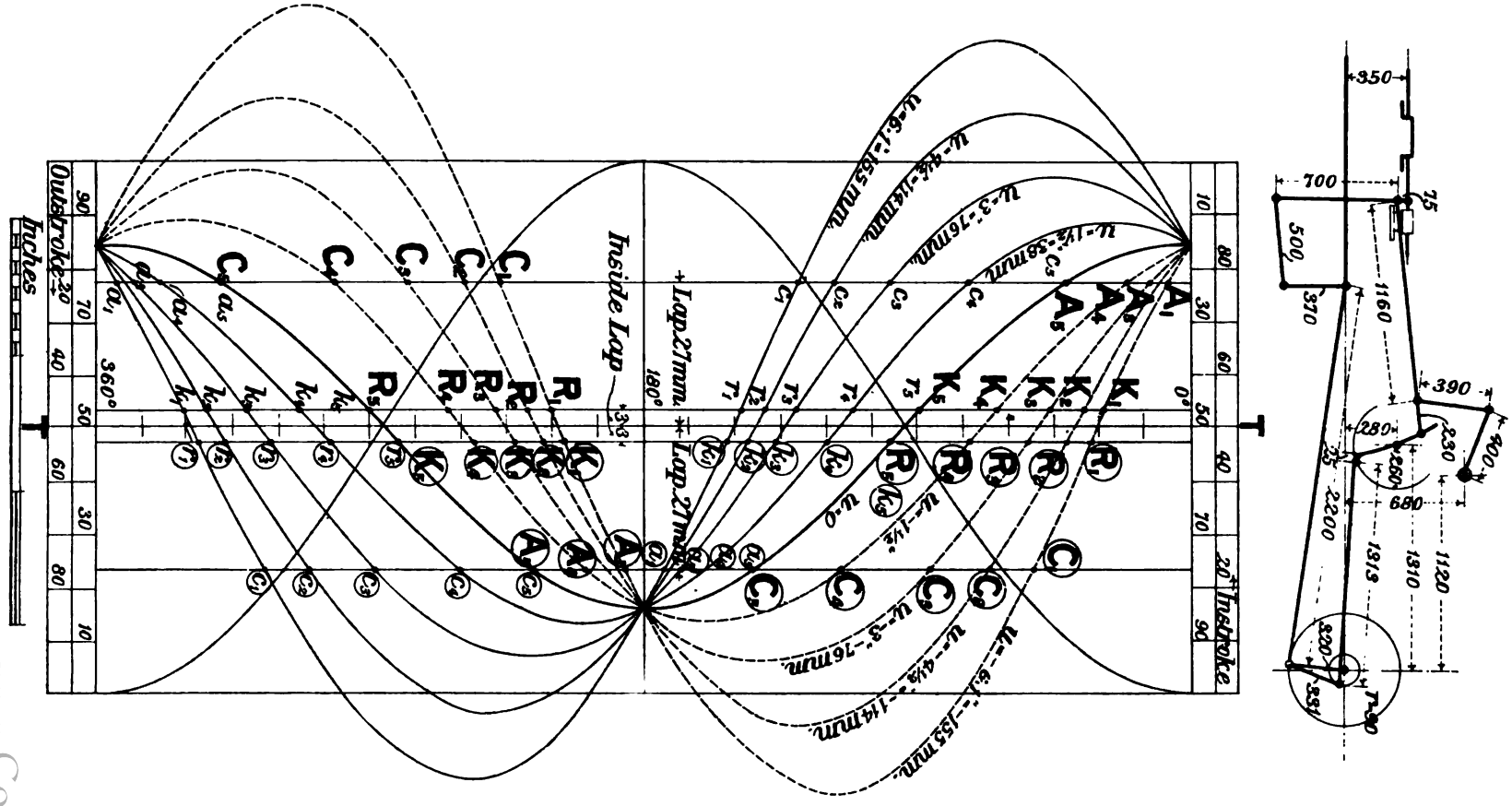

Fig. 129. Valve Diagram of Gear illustrated in Fig. 126.

Digitized by Google

The common vertical TT is placed to secure equality of lead in the two cycles. The centre line diagram at the top of Fig. 129, shows all the dimensions, and the setting of the weigh-bar shaft for which the displacement curves were drawn. A small vertical movement of the weigh-bar shaft centre relatively to the crank axle has a negligibly small effect on the distribution. In the actual engine the valve was set so that there was a slight difference in the leads for the two cycles.

The drawing of the displacement curves may be carried out in the following manner:—

(1) Set out, Fig. 130, the centre line of the valve spindle vv, the centre of the crank shaft O, the centre of the weigh-bar shaft W, and the fixed centre about which the link oscillates, Q.

(2) Assume that a displacement curve is to be drawn for a given value of u. Draw the weigh-bar shaft in the angular position corresponding to the given value of u, thus fixing the position of the point of suspension, U.

(3) A series of points have now to be found on the displacement curve for 24 equidistant crank positions. Let θ be the angle defining one position. Set out the crank at this angle and measure out from it the position of the eccentric, obtaining thereby the position of the point j. With radius equal to the length of the eccentric rod jF, draw an arc F_1F_2 from j as centre. Or suppressing the eccentric rod, this arc may be set out with a curved template. Fig. 130 is arranged on the assumption that this method has been used. (See Article 90, Fig. 93.) With radius equal to QF and centre Q cut the arc F_1F_2 in F. This fixes a position of the link. To draw it, use a template, shaped to the curve Ee, having the points Q and F correctly marked on it.

(4) Draw the path of the point H and fix the position of H in the path for the given value of θ.

(5) Make the chain of links HD, DJV, JSP, SU out of thin wood, letting in small transparent celluloid windows at V and P, pierced with a fine hole to define the points V and P, and arranged that the under surface of the celluloid is in contact with the surface of the paper. Fix points to the links at the centres corresponding to U and H and finish them to a fine needle point.

(6) Then placing one centre at U, and the other at the position found for H, move the chain into the position where the point P is on the centre line Ee whilst the point V is on the line

Digitized by Google

of stroke of the valve. This position can be found with accuracy since the fine centre lines can be brought easily to the centre of the needle hole in the windows. Then prick through the position V. This fixes the position of the valve corresponding to the crank angle θ. The remaining 23 positions can be found in a similar manner, and the displacement curve for the given value of u is then found by projecting or transferring these positions to the horizontals of the displacement diagram corresponding to the several crank angles, thus fixing the 24 points through which it passes.

(7) Repeat the process for different positions of the point of suspension U corresponding to stated values of u and having drawn the family of curves, place the vertical axis TT, to satisfy some stated condition of valve setting.

116. Walschaert gear continued. Approximate theory. First Approximation. In this investigation the several obliquities of the connecting rod, of the eccentric rod and of the suspension link, US, are neglected, and the value of u is supposed to remain constant.

Consider first the 180 degree component of the motion. The point J, Fig. 130, is the fulcrum about which the lever VJD turns under the action of the crosshead, and when the B component is equal

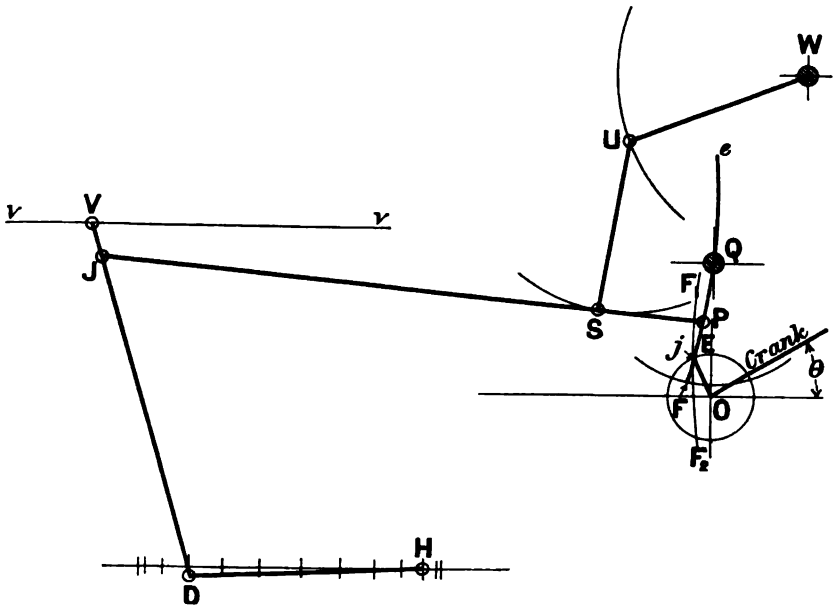

Fig. 130. Walschaert Gear. Centre lines after "suppressing" the eccentric rod.

Digitized by Google

to zero this point is at rest, except for the small vertical motion consequent upon the constraint of V in a straight line.

The point J must be chosen between the points V and D so that the stroke of V is equal to $2A$, that is to twice the steam lap plus twice the lead.

Let R be the radius of the main crank, then

$$VJ : JD = A : R \quad \text{.....(1)}$$

is a relation from which the proportions of the lever may be found when A and R are known.

The displacement X, of the point H, from its central position, in terms of the crank angle, which is of course the same as the displacement of the crosshead centre, is given by

$$X = R \cos \theta \quad \text{.....(2).}$$

Hence, neglecting the obliquity effect of the link HD, the value of the 180 degree component displacement is given by

$$-\frac{VJ}{JD} \times R \cos \theta \quad \text{.....(3).}$$

Secondly, consider the 90 degree component.

Let
$$QF = c,$$
$$QP = u,$$
$$Oj = r.$$

Neglecting the obliquity of the eccentric rod, the displacement of the point F, from its central position, is given by

$$r \cos (\theta + 90) = - r \sin \theta,$$

and the displacement of any point P, distant u from Q, will be given by

$$-\frac{u}{c} r \sin \theta, \text{ if } P \text{ is below } Q \quad \text{.....(4),}$$

$$+\frac{u}{c} r \sin \theta, \text{ if } P \text{ is above } Q \quad \text{.....(5).}$$

For positive rotation of the crank the negative expression must be taken. In this u may be supposed positive. Therefore by changing the sign of u to minus when it is measured out above Q, the expression will be adjusted for negative rotation without further consideration.

Neglecting the effect of the suspension link, and assuming the rod JP to move always parallel to itself, the point J will have the same horizontal movement as the point P. Hence equation (4) represents the displacement of the point J from its central position. So far as the lever VJD is influenced by the motion of the link it

Digitized by Google

turns about D as a fulcrum. The motion of J must be increased in the ratio $VD : JD$ to find the value of the 90 degree component at the valve spindle. Therefore the displacement of the point V, due to the action of the eccentric and the links through which the action is transmitted, is thus

$$-\frac{ruVD}{cJD}\sin\theta \quad\text{.....(6).}$$

The whole displacement of the valve, to a first approximation, is then given by

$$x = -\frac{VJ}{JD}\times R\cos\theta - \frac{ruVD}{cJD}\sin\theta \quad\text{.....(7).}$$

So that

$$A = \frac{VJ}{JD}\times R \quad\text{.....(8),}$$

$$B = \frac{ruVD}{cJD} \quad\text{.....(9).}$$

Second Approximation. By taking into account the obliquity of the connecting and eccentric rods an expression giving a near approximation to the actual displacement of the valve can be obtained. The assumption that the value of u remains constant must still be made. This assumption can be maintained sensibly true for either fore gear or back gear by properly choosing the position of the weigh-bar shaft. In engines designed for express work, and which therefore run usually in forward gear, the position of the weigh-bar shaft should be chosen to make the variation of u a minimum in forward gear. The result of that adjustment is generally to increase the slip in back gear.

Referring to Article 71 it will be seen that equation (1) gives the displacement of the piston from its central position in terms of the crank angle θ. Neglecting the effect of the link DH, this is also the displacement of D, Fig. 130, from its central position. Hence the 180 degree component of the valve displacement is given by

$$-\frac{VJ}{JD}\times R\left(\cos\theta + \frac{R\sin^2\theta}{2L}\right) \quad\text{.....(10),}$$

where L is the length of the connecting rod and R is the crank radius.

If r is the eccentric radius, and l is the length of the eccentric rod, the displacement of the point F from its central position is given by the expression

$$r\cos(\theta+90) + \frac{r^2\sin^2(\theta+90)}{2l} \quad\text{.....(11),}$$

which is equivalent to

$$-\left\{r\sin\theta - \frac{r^2\cos^2\theta}{2l}\right\} \quad\text{.....(12).}$$

Digitized by Google

The displacement of the point P, corresponding to a positive value of u, is

$$-\frac{ru}{c}\left\{\sin\theta - \frac{r\cos^2\theta}{2l}\right\} \quad \text{.....(13).}$$

Assuming u to remain constant in value, and neglecting the effect of the obliquity of the rod JP, the point J has the same horizontal motion as the point P.

Multiplying expression (13) by $\frac{VD}{JD}$ to obtain the value of the 90 degree component at the valve spindle, and adding the expression for the 180 degree component given in equation (10), the actual displacement of the point V is given by the expression

$$x = -\frac{VJ}{JD}\times R\left\{\cos\theta + \frac{R\sin^2\theta}{2l}\right\} - \frac{VD}{JD}\times\frac{ru}{c}\left\{\sin\theta - \frac{r\cos^2\theta}{2l}\right\} \quad (14).$$

This expression gives the displacement of the valve, reckoned from its central position, or centre of oscillation.

The position of the centre of oscillation changes as the value of u is changed. In order that the expression may give the displacements from a common axis, as the axis TT in the valve diagram, Fig. 129, for all values of u, a constant term must be added to the equation, whose value is to be adjusted to each change in the value of u.

Thus, let $f(u, \theta)$ represent the right side of equation (14). Then in general

$$x = f(u, \theta) + C \text{.....(15).}$$

Let a definite value, u_1, be given to u: then any value may be assigned to C. If the assigned value is zero, the equation gives the displacements from the centre of oscillation corresponding to u_1. For greater generality let the constant have the arbitrary value C_a.

When another value is given to u, u_n say, the constant C_a changes to C_x. If the gear is set so that the lead is constant, the values of x at the dead points are the same for all values of u. Hence when the displacements are measured from a common axis, the axis determined by the initial value C_a assigned to the constant, C_x can be found from the equality obtained by putting $\theta = 0$, in the general equation obtaining x, the displacement at the dead point $= f(u_1, \theta_0) + C_1 = f(u_n, \theta_0) + C_x$, from which

$$C_x = f(u_1, \theta_0) + C_a - f(u_n, \theta_0) \quad \text{.....(16).}$$

In order that the lead may remain constant for all values of u, the link must be arranged so that the point J is its centre of curvature when the crank angle is either zero or 180 degrees. The eccentric rod

Digitized by Google

and link must therefore have the configuration indicated in Fig. 131 for the crank angles 0 and 180 degrees. Unless this condition is realised, the point P cannot be moved from its extreme upper position

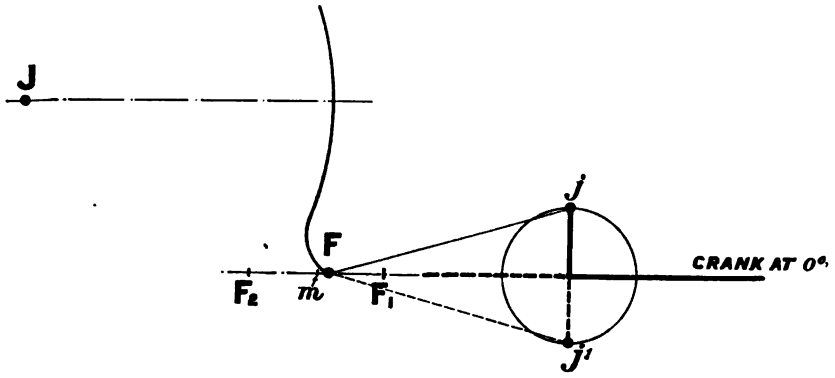

Fig. 131. WALSCHAERT GEAR. THE SETTING FOR CONSTANT LEAD.

to its extreme lower position without changing the lead. The point m marks the mid-position of F, and it will be at once understood from the figure that the link does not occupy its mid-angular position when the crank is at either dead point.

Example. The dimensions of the several quantities in equation (14) in the case of the high pressure gear of the Northern of France engine illustrated on page 226 are :—

$VJ = 75$ mm.
$JD = 700$ mm., therefore $VD = 775$ mm.
$R = 320$ mm.
$L = 2200$ mm.
$r = 90$ mm.
$l = 1313$ mm.
$c = 260$ mm.

Introducing these values in equation (14) and adding the arbitrary constant C_a,

$$x = -34{\cdot}25\,(\cos\theta + 0{\cdot}0727\sin^2\theta) - 0{\cdot}383u\,(\sin\theta - 0{\cdot}034\cos^2\theta) + C_a.$$

Table 9 exhibits the result of applying this formula to calculate points on the displacement curve for mid-gear, where $u = 0$. The value assigned to the arbitrary constant is zero. This value corresponds with the position of the common vertical axis TT, Fig. 129, which is there drawn so that it corresponds with the centre of oscillation of the valve

Digitized by Google

for mid-gear. From the Table it will be seen that the results, compared with the actual displacement, measured from displacement curves, are within about half a millimetre. There may of course be small errors in the drawing, so that so far as mid-gear is concerned, the formula may be considered fairly accurate.

The results of calculating points on the displacement curve with values of u, ± 114 mm., are given in Table 10. The corresponding measurements from the actual displacement curves are also tabulated. The differences between the measured and the calculated displacements are greater than in the case of mid-gear, chiefly because the suspension link keeps u in a continual state of change. In fore gear, however, where u has positive values, the differences are not great.

TABLE 9.

Walschaert Valve Gear.

Comparison of the calculated values of the displacement with the values measured from the actual displacement curves. Mid-gear.

Value of θ	x Calculated value mm.	x Actual value mm.	Difference mm.
0	− 34·25	− 34·2	0·05
30	− 30·2	− 30·9	0·70
60	− 18·97	− 19·3	0·33
90	− 2·49	− 2·6	0·11
120	15·2	15·6	0·40
150	29·1	28·9	0·20
180	34·25	34·0	0·25
210	29·1	29·2	0·10
240	15·2	15·7	0·50
270	− 2·49	− 2·8	0·31
300	− 18·97	− 19·0	0·03
330	− 30·2	− 30·6	0·4
360	− 34·25	− 34·2	0·05

Digitized by Google

TABLE 10.

Comparison of the calculated values of the displacement with the values measured from the actual displacement curves when u is equal to + 114 *and* − 114.

	$u = +114$ mm.			$u = -114$ mm.		
Angle	Calculated mm.	Measured mm.	Difference mm.	Calculated mm.	Measured mm.	Difference mm.
0	− 34·25	− 34·20	0·05	− 34·25	34·20	0·05
30	− 52·48	− 52·60	0·12	− 8·07	8·20	0·13
60	− 57·91	− 58·60	0·69	19·94	21·00	1·06
90	− 47·63	− 49·00	1·37	42·66	44·30	1·64
120	− 22·66	− 25·00	1·34	54·19	55·50	1·31
150	6·83	7·00	0·17	51·24	51·20	0·04
180	34·25	34·20	0·05	34·25	34·20	0·05
210	50·50	50·00	0·50	7·58	5·50	2·08
240	51·95	53·00	1·05	− 21·50	27·50	6·00
270	39·68	41·00	1·32	− 44·67	53·00	8·33
300	17·70	18·50	0·80	− 55·69	61·50	5·81
330	− 8·82	− 9·00	0·18	− 51·74	53·00	1·26
360	− 34·25	− 34·20	0·05	− 34·25	34·20	0·05

117. The design of a Walschaert gear. Proceed as follows:—

(1) Make a preliminary drawing of the gear, adapting the general arrangement to the space available, and for greater generality suppose the point F, Fig. 125, to move in an arc which is above the line of stroke. This drawing fixes provisionally the length of the connecting rod, the position, Q, of the centre of the link, the position, W, of the centre of the weigh-bar shaft, the distance $QF = c$, and the maximum value of u. It is generally convenient to connect the end of the eccentric rod to the lower end of the link, so that with the eccentric set at 90 degrees, the value of u will be positive, when measured out below the centre Q, and negative, when measured above the centre. The signs of u must be reversed if the eccentric is set 90 degrees behind the crank.

(2) Assume suitable values for the cut off, lead, and maximum port opening for steam, for full gear, and find the equivalent eccentric, whose constants are ρ, ψ.

Digitized by Google

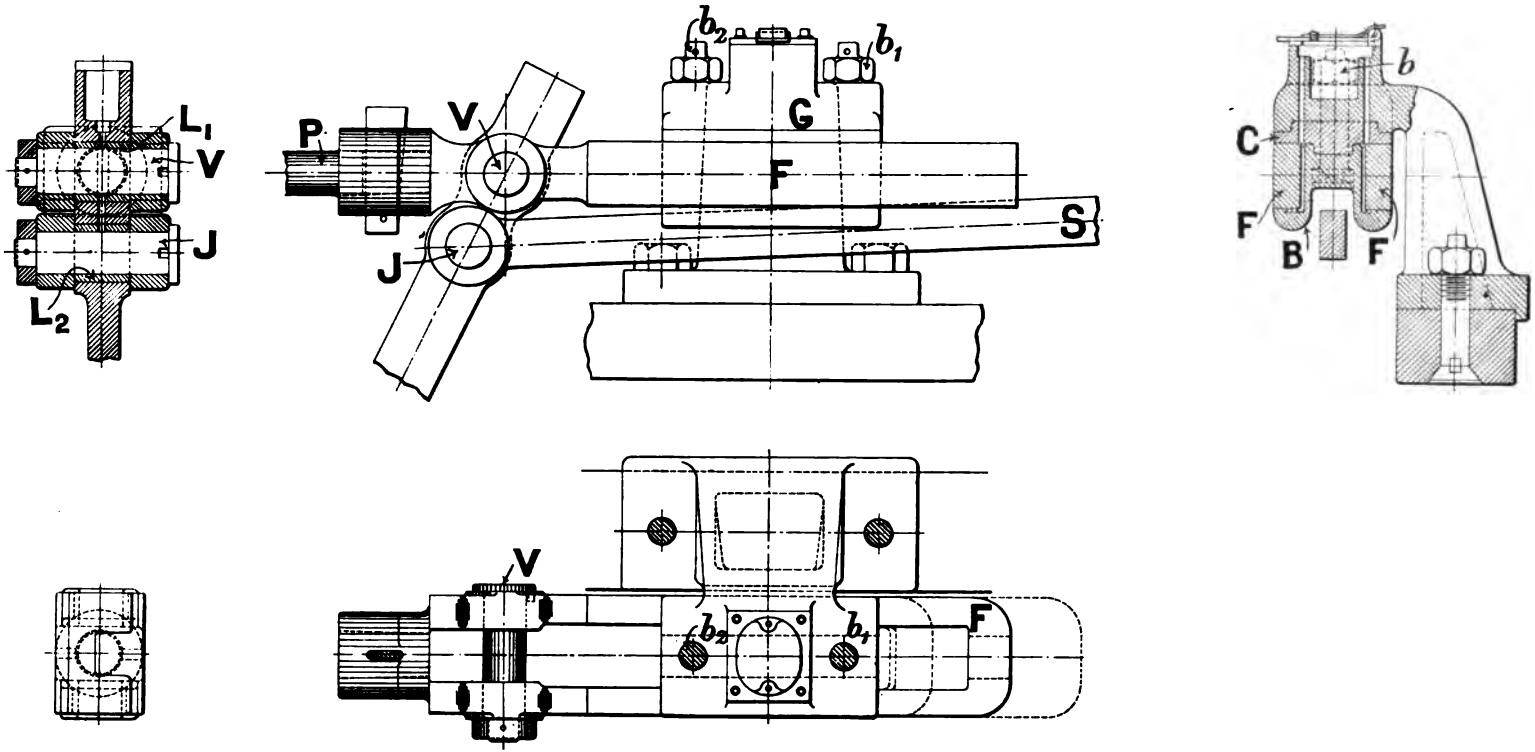

Fig. 132. WALSCHAERT GEAR. DETAILS.

Digitized by Google

(3) From Article 116, equations (8) and (9),

$$\rho \cos \psi = A = \frac{VJ}{JD} \times R \quad \text{.....(1)},$$

$$\rho \sin \psi = B = \frac{VD}{JD} \times \frac{ru}{c} \quad \text{.....(2)}.$$

(4) Design the link VJD. Equation (1) may be written in a more convenient form for this purpose, namely

$$JD = \frac{R}{A} \times VJ \quad \text{.....(3)}.$$

Then take a value of VJ large enough to obtain proper joints at V and J, substitute the known values of A and R, and calculate the length JD.

The design of the joints at V and J is an important matter. A drawing of these joints for the gear illustrated in Fig. 126 is shown in Fig. 132. The actual distance between the joints is 75 mm. = 2·95″. Pins V and J are obtained, each 40 mm. = 1·575″ diameter, with room for the gun-metal bushes L_1, L_2.

The object of the general arrangement is to get the centre of the joints V and J in the same vertical plane in order to avoid a twisting action on the valve spindle. This is accomplished by coupling the end of the valve spindle, P, to a long stirrup F, which carries the joint V centrally, and is guided in a straight line by the bracket G, bolted to the slide bars. A gun-metal block B, held up by the bolts b_1, b_2 forms, with a gun-metal piece C, a guide for the stirrup. The block B is hollowed out centrally to allow clearance for the valve rod when the motion block P is at the upper part of the link.

(5) Having fixed the lengths VD and JD, calculate the value of r from expression (2), substituting therein the maximum value of u. Thus

$$r = \frac{JD}{VD} \times \frac{cB}{u} \quad \text{.....(4)}.$$

(6) Find the proper angular advance of the eccentric sheave, or return crank, in the way detailed in the example following.

118. Example. Design a Walschaert valve motion, the full gear conditions being:—

Cut off, 80 per cent. of the stroke.
Maximum opening, 1·625 inches.
Lead, 0·3 inch.

Digitized by Google

The equivalent eccentric corresponding to these conditions is

$$\rho = 2{\cdot}655 \text{ inches.}$$
$$\psi = 120 \text{ degrees } 15 \text{ minutes.}$$

Therefore $\quad A = \text{lap} + \text{lead} = \rho \cos \psi = 1{\cdot}33$ inches.

$\quad\quad\quad\quad B = \rho \sin \psi \quad = 2{\cdot}3$ inches.

The steam lap is therefore 1·03 inches.

Design of the lever VJD. Let the stroke of the piston be 24 inches, so that the crank radius, R, is 12 inches, and let the distance VJ be 3 inches. Then from equation (3) of Article 117,

$$JD = \frac{12 \times 3}{1{\cdot}33} = 27 \text{ inches.}$$

Determination of the radius of the eccentric sheave. Let it be assumed that the preliminary drawing has shown that the following dimensions will be convenient, namely,

$$c = 10 \text{ inches.}$$
$$u = 6 \text{ inches for a maximum value.}$$

Also the calculation just made gives $JD = 27$ inches; and $VD = (27 + 3) = 30$ inches. Then from equation (4) of the present article,

$$r = \frac{10 \times 27 \times 2{\cdot}3}{6 \times 30} = 3{\cdot}45 \text{ inches.}$$

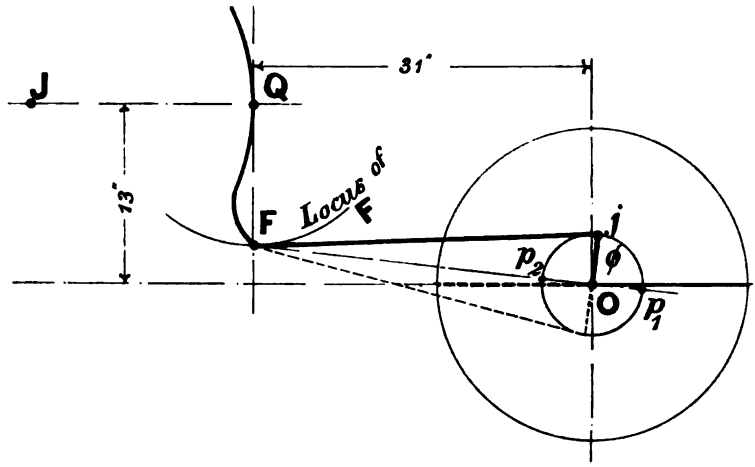

Fig. 133. WALSCHAERT GEAR. THE SETTING OF THE ECCENTRIC SHEAVE.

To find the angular advance of the eccentric sheave, or the angular position of the radius of the return crank. Set out the link, Fig. 133, in the position where J is the centre of curvature. J is to be taken on a line parallel to the line of stroke of the valve and passing through the

Digitized by Google

centre of the link Q. JQ is equal to the length of the valve rod and this length is determined by the preliminary drawing.

Draw QF at right angles to the line of stroke of the piston. Join FO. Then the points p_1 and p_2 are very nearly the positions occupied by the centre of the eccentric sheave when the point F is at its dead points. Draw Oj at right angles to FO. Then Oj is the position which the eccentric must occupy when the crank is at 0 degrees, and therefore ϕ is the angle at which it must be set with regard to the crank. The dotted position of the crank and eccentric shows that the point F is brought to the same position in its path when the crank is on the 180 degree position. Hence for either of these positions the motion block may be moved from one extreme position of the link to the other, without moving the valve, because J is all the time at the centre of curvature of the link.

The weigh-bar shaft centre can now be chosen to minimise the slip in either gear, or to keep the slip as small as possible in both forward and backward gear.

119. Radial gears. Hackworth's gear. John Wesley Hackworth, in 1859, patented a valve gear, based upon the principle of combining two motions at right angles, which differed considerably from the forms of gear in use up to that date, and this gear may be looked upon as the first of a class of reversing motions which have since been developed under the name of radial gears.

Fig. 134 shows the principle of the gear which Hackworth patented in his specification, number 2448. An eccentric OD is placed at 180 degrees angular advance with the main crank, OK. The eccentric crosshead J is constrained to move, by the guide PP, in a straight path which may be placed exactly at right angles with the line of stroke of the piston, or it may be inclined to the right or to the left of this vertical position, and held at a definite angle, by means of suitable controlling gear, motion taking place about the fixed axis W. The valve rod VY is now jointed to the eccentric rod at a point V.

It will be seen at once that the horizontal projection of the motion of V gives a component at 180 degrees with the crank, the half stroke of which may be made equal to the quantity A, the lap plus the lead, by suitably choosing the eccentric radius and the position of the point V along the rod; and that the horizontal projection of the motion of J in its inclined path P gives a 90 degree component, which, reduced in the ratio $VD:JD$, combines with the 180 degree component to produce a resultant horizontal motion of V suitable for working a slide valve. The magnitude of the 90 degree component is

Digitized by Google

varied by varying the inclination κ of the path PP. When the path is vertical, the 90 degree component vanishes (neglecting the obliquity of the valve rod VY) and the motion is in mid-gear. When the inclination is changed over from one side to the other of the vertical position, the sign of the 90 degree component is changed, and the engine is reversed. Such briefly is the principle of the action of Hackworth's gear. An approximate expression for the motion of the valve can easily be obtained, when the effects of the obliquities of the connecting rod and the valve rod are neglected.

The horizontal projection of the motion of D in terms of the crank angle is given by

$$-OD\cos\theta.$$

Assuming the path PP to be vertical, so that the 90 degree component is zero, the corresponding horizontal motion of V is

$$-\frac{VJ\times OD}{JD}\cos\theta.$$

Again, assuming the path PP to have its fixed axis W placed at the mid-position of J's motion, the vertical displacement of J from its central position in the path, neglecting the obliquity of the eccentric rod, is given by

$$OD\sin\theta.$$

When the path is inclined at an angle κ to the vertical, the horizontal projection of this is approximately

$$\tan\kappa\times OD\sin\theta \quad\text{.....(1)},$$

and since J is turning about the point D as fulcrum, the magnitude of this must be reduced in the ratio $VD:JD$. Hence the 90 degree component is given by

$$\pm\frac{\tan\kappa\times VD\times OD}{JD}\sin\theta \quad\text{.....(2)},$$

the plus sign being used when the path is inclined to the left of the vertical and the minus sign when it is inclined to the right. The former position corresponds to negative rotation, and the latter to positive rotation. Therefore the whole displacement of the valve from its central position is given approximately by

$$x=-\frac{VJ\times OD}{JD}\cos\theta\pm\tan\kappa\frac{VD\times OD}{JD}\sin\theta\quad\text{.....(3)},$$

from which

$$A=-\frac{VJ\times OD}{JD},$$

$$B=\pm\frac{VD\times OD}{JD}\tan\kappa.$$

Digitized by Google

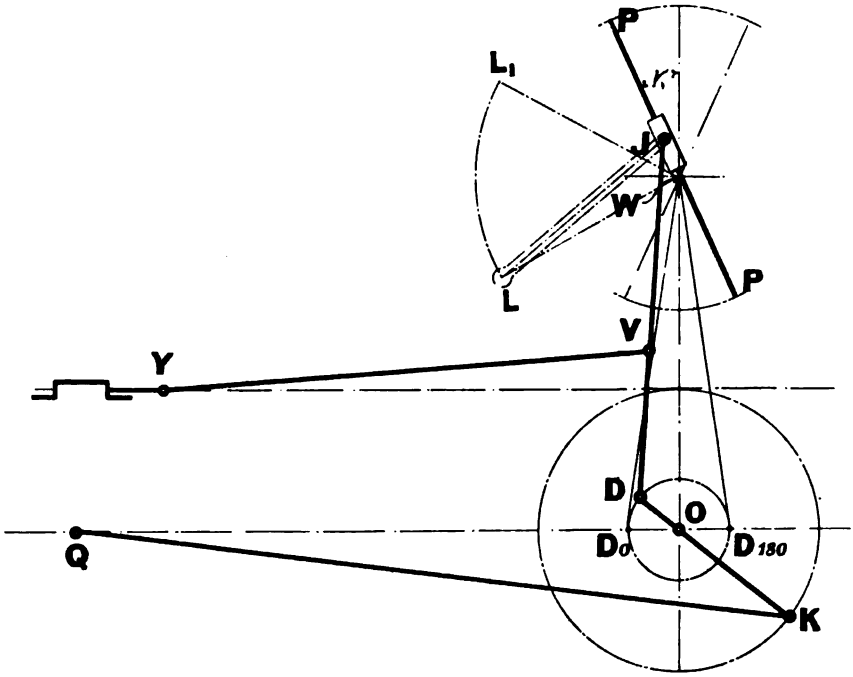

Fig. 134.

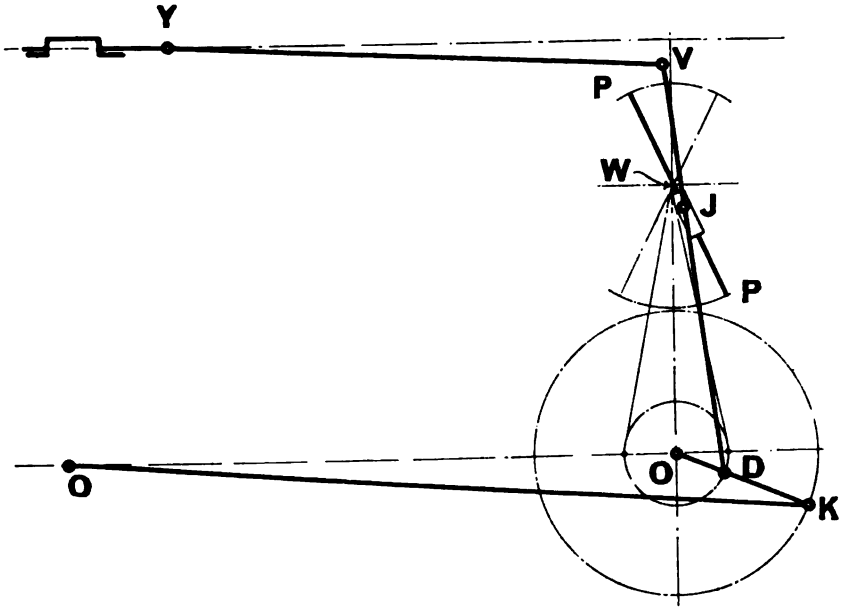

Fig. 135.

HACKWORTH GEARS.

Digitized by Google

The variable angle κ occurs in the second term of the expression only, consequently the lead is constant, because when $\theta = 0$ or 180 degrees, this term vanishes.

Hackworth shows an arrangement, in the specification quoted above, in which the path PP is replaced by a radius link LJ, so centred, that the point J is guided in a curved path. The inclination of the curved path is changed by changing the centre L about which the link LJ can vibrate. The controlling gear must be so designed that the centre L may be held fixed anywhere along the path LL_1.

Hackworth's inclined path may be placed between the points V and D, as shown in Fig. 135. In fact he shows such an arrangement in his specification No. 4246 taken out in 1876. In this case the eccentric sheave OD must be placed with zero angular advance, because the fulcrum of the rod J is between V and D, the motion of V is therefore 180 degrees out of phase with the crank.

120. Marshall gear. In 1879, specification No. 2138, Marshall patented the arrangement of the Hackworth gear, Fig. 134, in which a

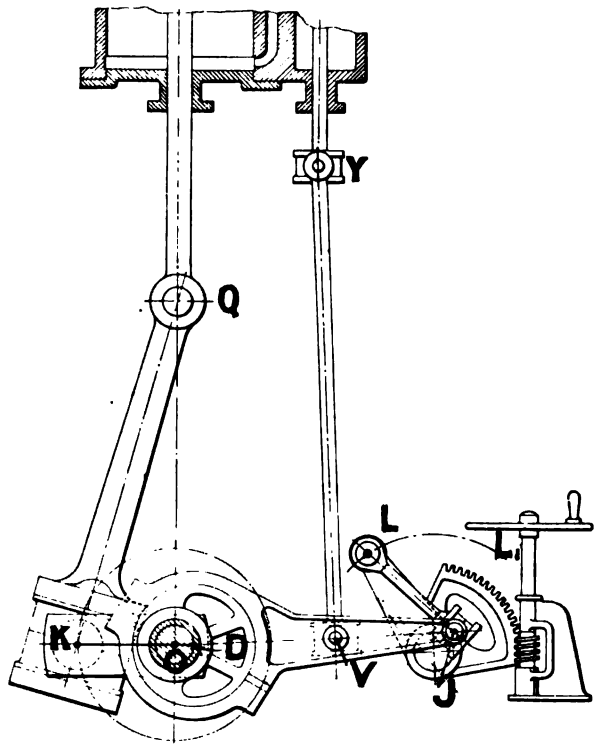

Fig. 136. Marshall Valve Gear.

Digitized by Google

curved path was used instead of the straight slide PP, in combination with certain modifications of the steam ports, with the object of correcting some of the inequalities of distribution connected with this type of radial gear. The curved path is determined by a radius rod. Marshall's gear applied to a marine engine is shown in Fig. 136, where the arrangement used for changing the position of L, along the arc LL_1, is shown*. The eccentric OD is placed at 180 degrees with the main crank, and the point J is constrained to move in a curved path whose inclination to the mid-position can be varied by means of the worm wheel and quadrant shown in the figure.

121. Two geometrical conditions which must be satisfied by a radial gear. There are two principles connected with the design of radial gears which require closer examination. These may be stated as two conditions, which must be satisfied, if the gear is to give a fairly symmetrical motion to the valve about the centre of oscillation, combined with the property of constant lead.

(1) When the crank is placed at 0 or 180 degrees, the movement of the reversing gear from one extreme position to the other should not cause any motion of the slide valve. This condition implicitly fixes the position of W, Fig. 134, the fixed axis of the path PP, because it is the turning of this path about the axis W, from one extreme position to the other, which reverses the engine from full forward to full backward gear. Hence the point J must coincide with the point W in these two crank positions, if the condition is to be fulfilled.

(2) The point W should be as nearly as possible the centre of the stroke of J, otherwise, the movement of the valve will be unequal about the centre of oscillation, because the 90 degree component will have different maximum values during the rotation of the crank from 0 to 180 and from 180 to 360 degrees.

Briefly, for an accurate gear, J must move as though driven by a rod infinitely long, so that J is at the centre of its stroke when the main crank angle is 0 or 180 degrees, and when the inclination of the axis is changed it must turn about an axis coincident with J's central position.

It will be seen at once that Hackworth's gear does not exactly realise these two conditions. So far as the first is concerned, this is exactly realised if the axis of the path is made to coincide with the

* Reproduced from the *Proceedings of the Institute of Mechanical Engineers*, 1880.

Digitized by Google

position J occupies in a line at right angles to the stroke through the crank shaft centre, when the crank is placed at 0 or 180 degrees. But by placing W thus it makes it impossible to realise the second condition exactly, because owing to the obliquity effect of the rod DJ, W is not then the mid-position of J's travel. It is also evident that when the path PP is placed in the mid-gear position there will be a small value of the 90 degree component due to the obliquity of the rod YV.

122. Impracticability of connecting the point D directly to the connecting rod. An examination of Fig. 134 would suggest the practicability of taking the motion of D from some point on the connecting rod, thus obtaining a valve gear which is both a reversing and an expansion gear, without the use of eccentric sheaves at all. Try it, and then apply the conditions of the previous article. Thus, set out the crank circle, Fig. 137, and assuming some point on the connecting rod, R, find the points R_0 and R_{180} occupied by this point when the crank is respectively at 0 and 180 degrees. Bisect R_0R_{180} in O_1, and through O_1 draw a line O_1Z, at right angles to the line of stroke of the

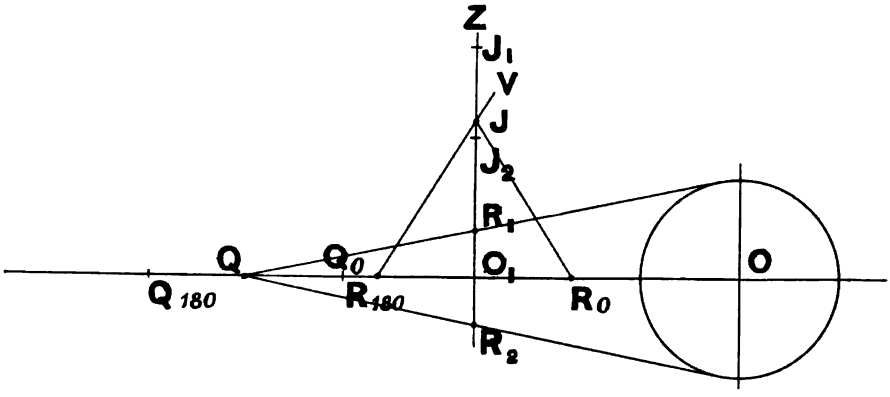

Fig. 137. Obliquity Effect of the Link RJ.

piston. Then take any point J on this line. Then JR_0 is the link corresponding with the eccentric rod DJ of Fig. 134, in the position when $\theta = 0$. JR_{180} is the position of the link when $\theta = 180$ degrees. The point J must therefore coincide with the axis W of the path, if the first condition of the previous article is to be fulfilled; for only then can the path be moved from one extreme position to the other without moving the valve. If the second condition is to be fulfilled, J must also mark the mid-travel of the end of the link JR_0. Mark off J_1 and J_2, the dead points of J's motion, and it will be seen at once that the realisation of the second condition is impossible.

Digitized by Google

123. Brown gear. This is shown in Fig. 138, as applied to a Swiss locomotive. The connecting rod drives the crank through the rocking lever *GHI*. And with the gear shown, it is possible to connect the point *D* of the lever *VJD* to a point on the lower connecting rod *IK* so that the two conditions of Article 121 may be approximately satisfied. In gears of this type, the effect of the obliquity of the valve rod on the movement of the valve, may be approximately corrected by causing the point *J* to move in a path struck with a radius equal to the length of the valve rod itself. A characteristic feature of Brown's gear is the use of a system of compound levers to guide *J* in an approximately circular path of large radius, for the purpose of correcting the obliquity of the valve rod, whilst the levers themselves are short. The arrangement is clearly shown in Fig. 138. A frame, which can be turned about

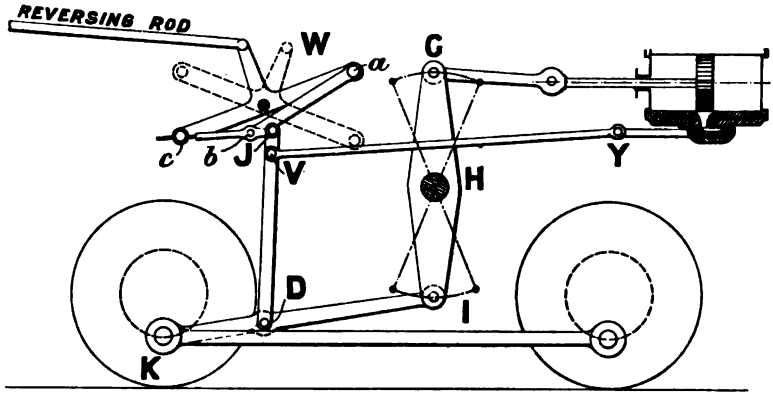

Fig. 138. Brown Valve Gear.

a fixed axis *W*, carries two fixed centres at *a* and *c* respectively. The link *ab* vibrates about the centre *a*, guiding the point *b* in the arc of a circle. A slide is centred at *c* through which the end of the lever *Jb* is free to move. The motion is in fact geometrically the same as that of the oscillating cylinder engine, *ab* being the crank, and *cb* the cylinder and piston rod, but the piston rod is produced to *J*. By properly choosing the proportions, the point *J* may be constrained to move in a curve whose curvature is approximately constant. By choosing the proportions so that the curve has a radius equal to the length of the valve rod the obliquity errors of the valve rod may be approximately corrected*.

Many examples of this gear may be seen on the locomotives in Switzerland, to which country the use of the gear has been principally confined.

* For further illustration of the Brown gear and some historical notes in connection therewith, see a paper by Otto Grunger, published in *Engineering*, Jan. 15, 1886.

Digitized by Google

124. Joy gear. In 1879, specification No. 929, Mr David Joy patented a gear worked from the connecting rod. The point *D*, Fig. 139, is connected to a lever *RS*, *R* being pinned to the connecting rod itself, and *S* being guided along the line O_1Z. With this arrangement it is possible to choose the point *D* in such a position along the link *RS* that the two conditions of Article 121 may be simultaneously satisfied. The way to choose this point will be shown in Article 129.

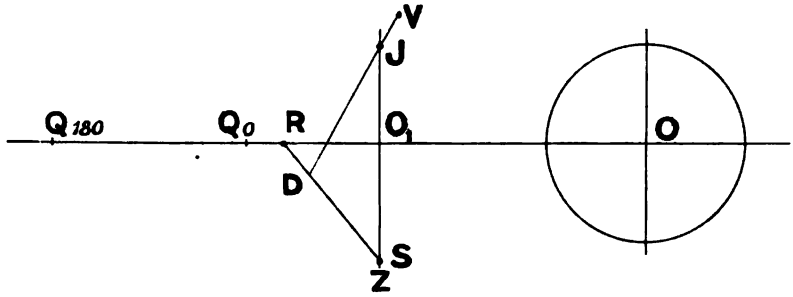

Fig. 139. Correction of the Obliquity Effect of *DJ* by the introduction of the Link *RS*.

This gear formed the subject of a paper communicated to the Institute of Mechanical Engineers at the Barrow meeting in 1880, at which Mr F. W. Webb exhibited a London and North Western six coupled goods engine, cylinders 18″ diameter × 24″ stroke, fitted with the gear. Subsequently, the gear was used extensively on the London and North Western Railway, nearly the whole of the compound locomotives being fitted with it. It was used to some extent on the Great Eastern Railway, by Mr T. W. Worsdell, and to a much greater extent on the North Eastern Railway. Mr Aspinall has introduced the gear on the Lancashire and Yorkshire Railway, and Fig. 140 shows the gear applied to a four coupled express engine, belonging to the Lancashire and Yorkshire Railway.

It will be seen that the 180 degree component of the valve displacement is obtained from the lever *VJD*, the lower end receiving a horizontal movement from a link *RDS*, jointed to the connecting rod at *R*, and to a radius rod at *S*. The object of the radius rod *FS* is to guide the lower end of *RDS* as nearly as may be in a vertical straight line.

The lever *VJD* must be so proportioned, that considering the point *J* to be a fulcrum, at rest, the end *D* receives such a horizontal movement, that the point *V* moves a distance equal to the lap plus the lead, to the left or to the right of its central position. The fulcrum *J* must also be placed between the points *V* and *D* in order to secure

Digitized by Google

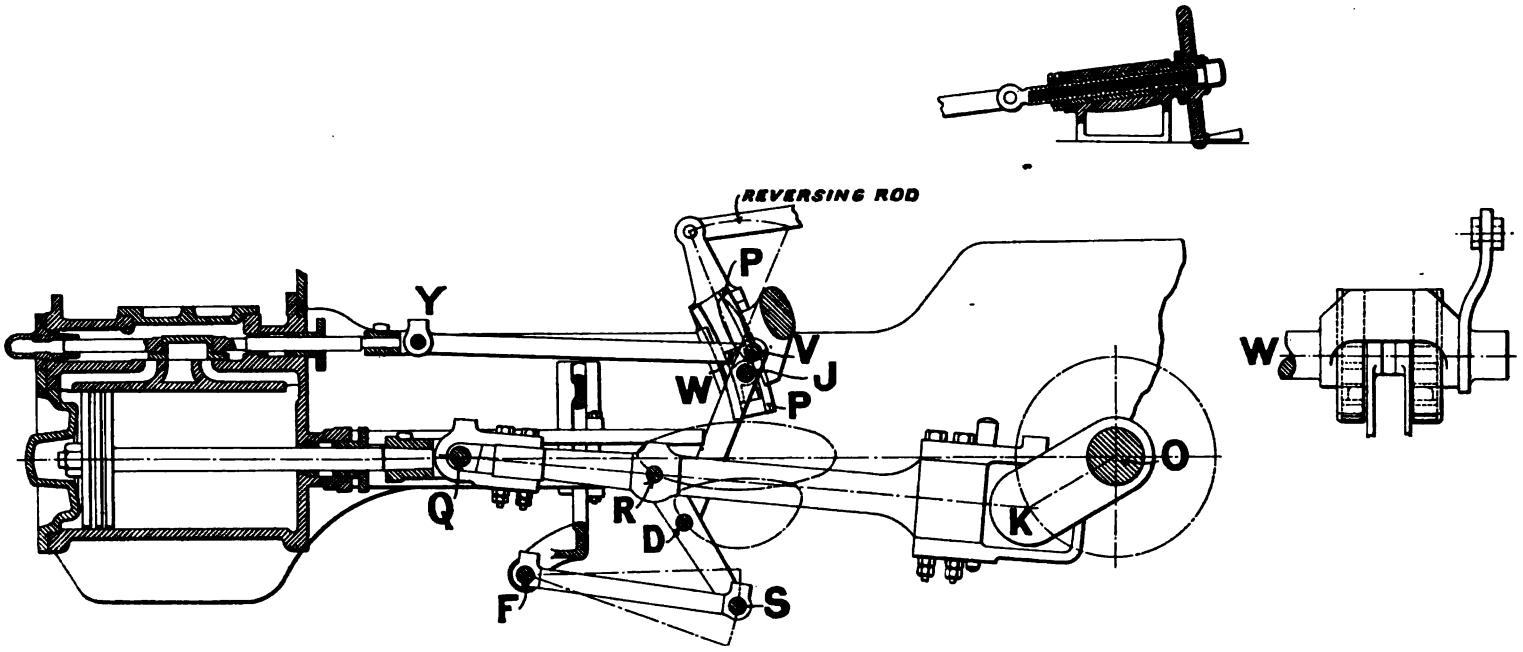

Fig. 140. Joy Valve Gear. Lancashire and Yorkshire Railway. The dimensions are given in Figs. 142 and 145.

Digitized by Google

the reversal of the movement of V with regard to the movement of the point D. Thus the point V communicates a motion to Y, so that Y moves as though it were connected to an eccentric crank having 180 degrees angular advance, and a radius equal to the lap plus the lead.

The 90 degree component of the motion is obtained by guiding the point J in a fixed inclined path, PP, which is centred at W, and which is curved to the radius of the valve rod VY. The projection of J's motion on the line of stroke, multiplied by the ratio VD/JD, is the value of the 90 degree component. The multiplication by the ratio VD/JD is necessary, because, so far as the motion of V is influenced by the sliding of J in the inclined path, the lever may be supposed to move with the end D always in a vertical straight line, so that D is a fulcrum about which the lever is turning.

When the crank angle is 0 or 180 degrees, the projection of J's motion is zero; and when the crank is at 90 degrees or 270 degrees, the projection is in the neighbourhood of a maximum.

Hence the projected motion of J, combined with the motion which Y receives from the horizontal movement of the point V, together give a displacement to the valve, which is suitable for distributing the steam.

The magnitude of the 90 degree component is changed by changing the inclination of the path PP and the change in the inclination is made, just as in the Hackworth gear, by means of a rod, connected with a reversing wheel of the usual type. When the reversing wheel is turned into the position where it holds the path PP, so that a tangent to it at W is vertical, the 90 degree component of the motion is zero; and the apparatus is in "mid-gear." J simply slides up and down in the path without moving Y, and the only motion Y receives is that from the horizontal movement of D about the fulcrum J.

The sign of the 90 degree component is changed by changing the inclination of the path PP from one side to the other of the mid-position.

The condition that the lead shall remain constant for all degrees of expansion is fulfilled if the point J coincides with the point W, the fixed axis of the path PP, when the crank occupies either the zero or 180 degree positions. Then, and then only, may the path PP be turned about its axis W, from one extreme inclination to the other, without moving the valve.

The fulfilment of this condition cannot always be realised exactly when the gear is fitted to a locomotive, especially one of the tank engine class, because the variation in weight of the engine, due to the

Digitized by Google

gradual consumption of fuel and water, allows the frame to rise slightly on the springs, carrying with it the axis W, without any corresponding movement of the crank axle. Consequently, when such movement takes place, the points J and W do not coincide when the crank is either in the zero or the 180 degree position.

The arrangement of the gear shown in Fig. 140 is that which is applied to some 7′ 3″ four coupled express passenger engines on the Lancashire and Yorkshire Railway.

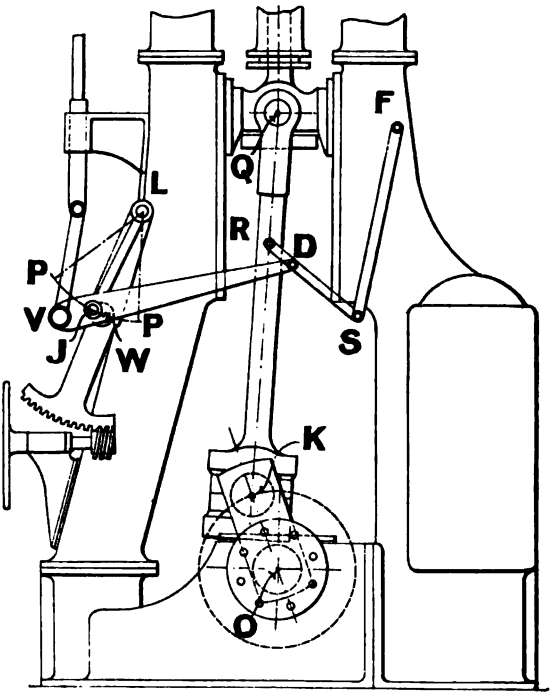

Fig. 141. Joy Valve Gear.

Fig. 141 shows the gear applied to a marine engine, where a radius rod JL is used to guide J in the path PP. The inclination of the path is changed by changing the position of the centre L.

125. Joy gear continued. Displacement curves for the gear shown in Fig. 140. Here the variable quantity u, which has hitherto been used to define the different settings of the gears examined, is replaced by a constant κ, which defines the angle made by the path PP with its mid-position.

Defining this constant more accurately, let a tangent to the path PP, at the point W, when the path is in mid-gear, be considered the

Digitized by Google

zero position. Let κ now be defined as the angle which the tangent to the path at W, makes with the zero position, being reckoned positive when the angle is measured to the left of the zero position and negative when measured to the right. A little consideration will show that with this definition of the sign, a positive value of κ corresponds to positive rotation, always assuming that the steam is admitted at the outside of the valve.

Displacement curves corresponding to values of κ,

$$21\tfrac{1}{2}^\circ,\ 14\tfrac{1}{3}^\circ,\ 7\tfrac{1}{6}^\circ,\ 0,\ -7\tfrac{1}{6}^\circ,\ -14\tfrac{1}{3}^\circ,\ -21\tfrac{1}{2}^\circ,$$

are shown in Fig. 142. It will be observed that the common vertical axis is placed to secure equality of lead in the two cycles, and that the lead is constant. The piston displacement curve is added, and also the lap lines, thus converting the drawing into a valve diagram for the gear.

126. Joy gear continued. The drawing of the displacement curves. The gear should be drawn in the configuration corresponding to, at least, 24 equidistant crank positions in order to find the corresponding positions of the valve. It is necessary to set the gear out full size in order to obtain the accuracy required in practice. This is a somewhat troublesome process, and it is generally more expeditious to make a light model of the gear in wood, and to use it for the purpose of finding the position of Y, for a series of crank angles, by direct measurement, thus obtaining data for the drawing of the displacement curves.

There is a way, however, in which, by the use of templates all the rods of the gear may be "suppressed," and the paths of different points in the gear may be drawn, without using the actual centres or lengths of the links at all; so that all the point paths, necessary to the solution of the problem of locating the valve for a given crank position, may be drawn grouped about a centre, and thus all the work may be done on a reasonable sized sheet of paper. The method will be given in detail, because it may be applied generally to many similar problems, and the working out of the Joy gear by its means therefore may be considered as a particular application of a general method of great utility.

The method depends upon the following Theorems. A particular application of Theorem 1 has been given already in Article 35.

127. Theorem 1*. Fig. 143. If the respective paths of two points, P and Q, of a rigid link, be given, and if one path be displaced

* Due to MM. Coste and Maniquet, *Traité Théorique et Pratique des Machines à Vapeur au point de vue de la Distribution.* Baudry & Cie, Paris, 1886.

Digitized by Google

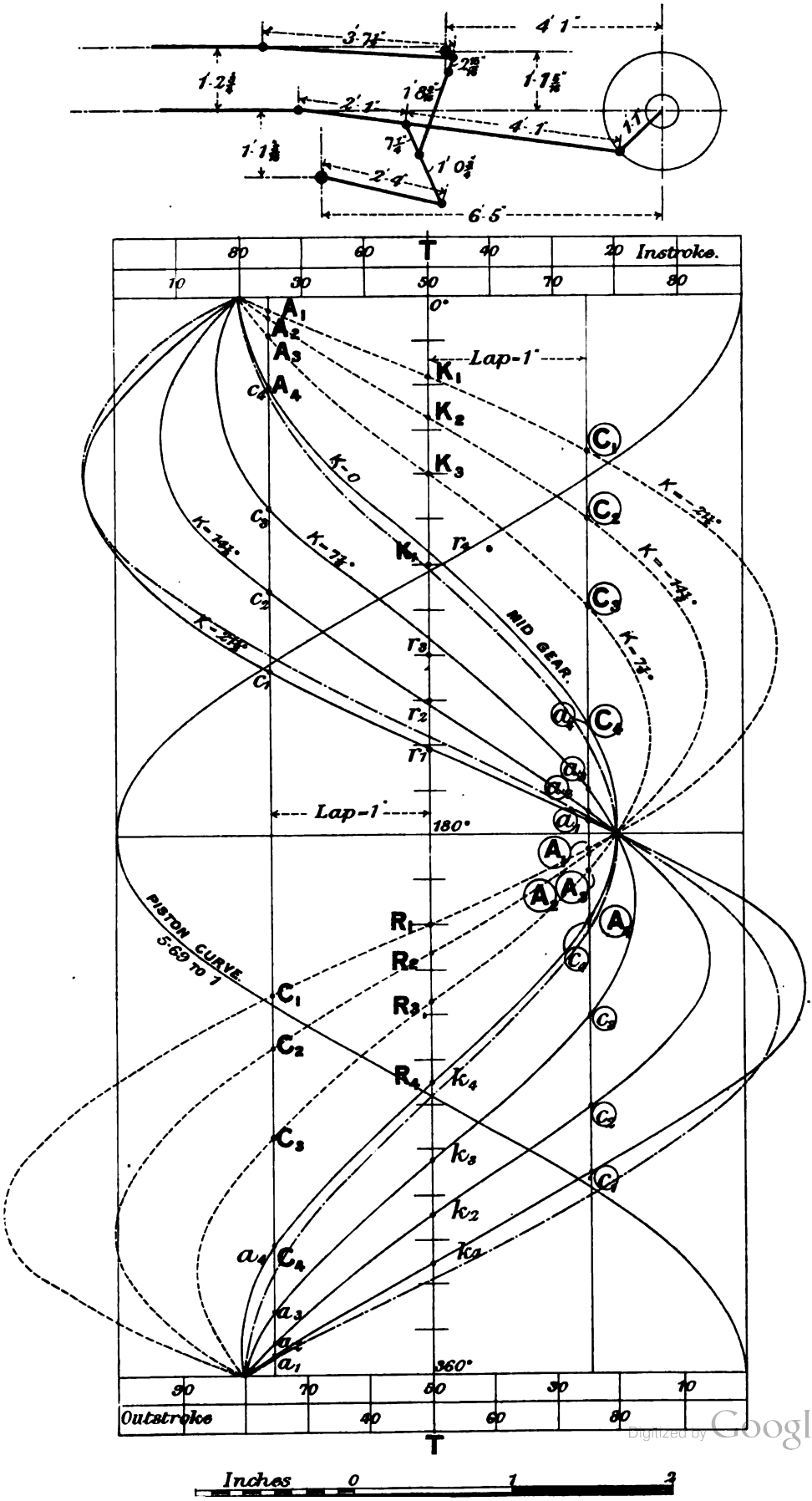

Fig. 142. Valve Diagram of the Joy Gear illustrated in Fig. 140.

Digitized by Google

a distance PQ, parallel to any fixed direction, corresponding positions of P and Q in their respective paths may be projected, the one from the other, by a template, shaped, so that one edge is circular and of radius PQ whilst another edge is a radius of that circle: and placed so that when the corner of the template is on the displaced path, the curved edge passes through the given position on the other path, whilst the straight radial edge is parallel to the direction of displacement, and is pointing in the direction of the true position of the path on which the corner of the square is placed.

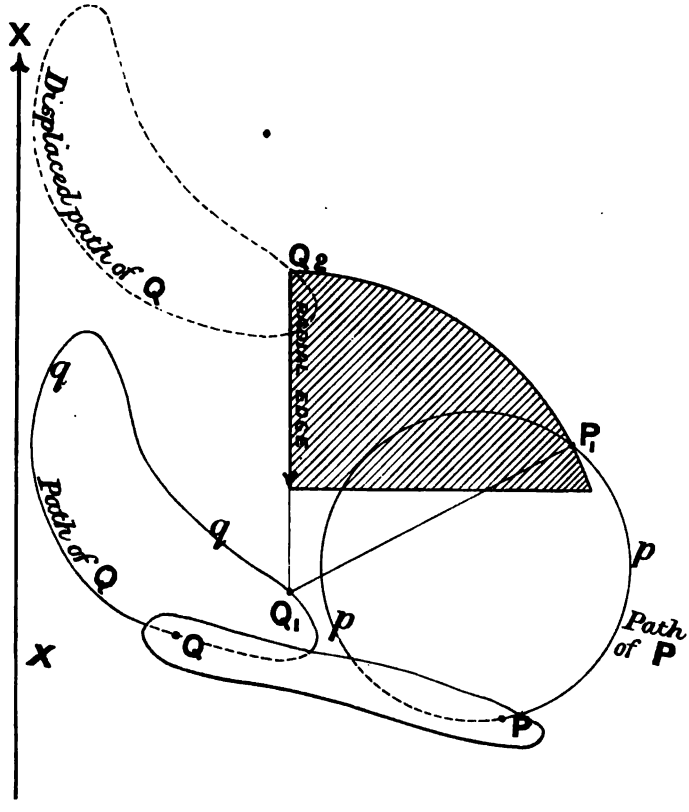

Fig. 143. Locating Corresponding Points on Displaced Paths.

Proof. Let P, Q be two points on the rigid link whose respective paths are Ppp and Qqq. Pet P_1 be any given position on the path of P. The corresponding position of Q in its path is found by drawing an arc, with radius PQ, from P_1 as centre, cutting Q's path in Q_1. Suppose the path Qqq to be moved parallel to XX, and through a distance equal to QP.

Digitized by Google

Considering the point Q_1, its new position will be Q_2, Q_1Q_2 being equal to QP, and parallel to XX. But Q_1Q_2 is equal to Q_1P_1. Therefore the points P_1 and Q_2 lie on the arc of a circle drawn from Q_1 as centre.

Clearly the position Q_2, in the displaced path, may be fixed by using the set square indicated by shading in the figure, where it is shown both shaped and placed as required by the theorem.

The proof is true for every pair of corresponding points on the paths. Hence the theorem.

Corollary. If the path of Q is displaced, parallel to XX, a distance QC, and the path of P, parallel to XX, a distance PC; then, if the algebraic sum of the two displacements is equal to PQ, an arc of radius equal to PQ will still pass through a pair of corresponding positions.

It will be noticed that one of the points, Q_2, is fixed by the corner of the template. In actual work it is rather awkward to locate a point in this way and it will be found more convenient to make a template of the kind already described in Article 35. No difficulty will be found in applying the principles of the theorem with a template or curve so shaped. Another way is to draw a curve of radius PQ on a sheet of squared tracing paper. The lines of the paper enable the curve to be placed on the paths quickly and conveniently so that the corresponding positions of two points on the paths may be pricked through.

This Theorem was extended by MM. Coste and Maniquet to find the position of any point on the link relatively to the displaced paths, the locus of this point being of course the displaced point-path. The following form of this extension of the Theorem, which is simpler and more quickly applied, is due to Mr Archibald Sharp.

Theorem 2*. If the displaced paths of two points P, Q, of a rigid link, be given (the paths having been displaced relative to one another a distance PQ, in a direction parallel to a fixed direction XX), and a series of corresponding points on them be joined by straight lines p_1q_1, p_2q_2, p_3q_3, etc.; then, if each of these straight lines be divided at c_1, c_2, c_3, etc., in the same proportion that a point C divides the straight line PQ, a curve drawn through the points c_1, c_2, c_3, etc., is the point-path of C, displaced a distance CP, relatively to the path P, in a direction parallel to XX.

* See an article by Mr Archibald Sharp, who applied them to draw the point paths of several mechanisms, including a Joy gear, in an article in *Engineering*, April 6, 1894.

Digitized by Google

Let the circle and the dotted curve, Fig. 144, be the given paths which have been displaced a distance PQ relatively to one another, in a direction parallel to XX. Displace the dotted path through a distance equal to PQ, parallel to XX, in the reverse direction to the original displacement. Then the two paths will be placed in the same relative position with regard to each other which they actually occupy in the mechanism; and in this position the distance between each pair of corresponding points on the paths is constant, and equal to PQ, the length of the link.

Let p, Q be a pair of corresponding points on the actual paths, and let q be the corresponding position of Q in the displaced path. Join pq and take a point c so that

$$qc : cp = QC : Cp.$$

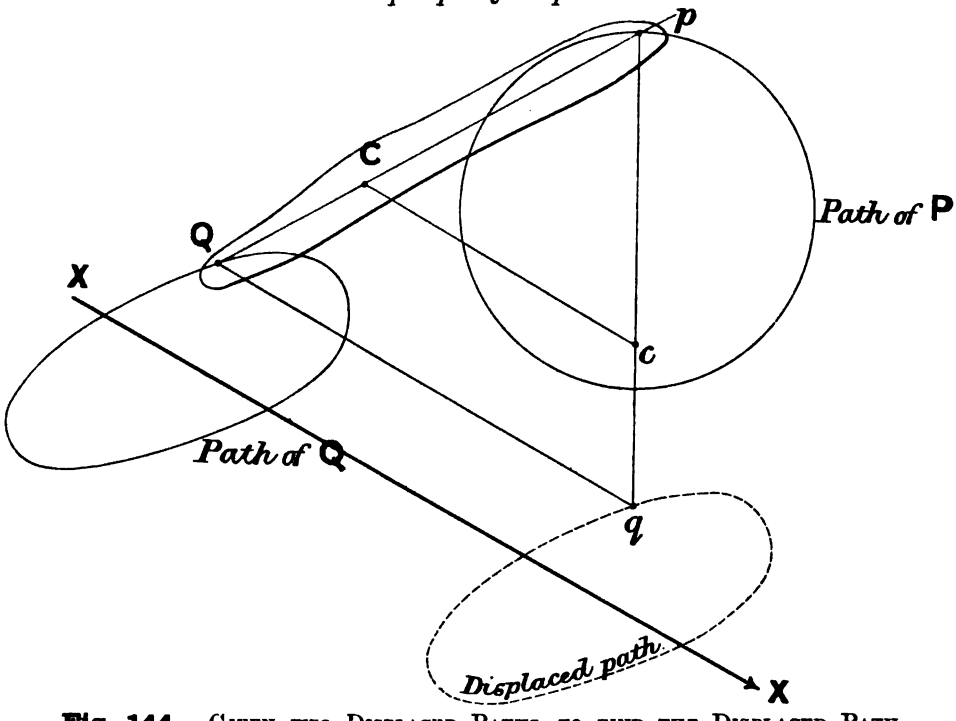

Fig. 144. Given two Displaced Paths, to find the Displaced Path of a Third Point on the Link.

Then the theorem is proved if it can be shown that Cc is equal to Cp, and that Cc is parallel to XX.

Since c and C divide the sides pq and pQ of the triangle pQq in the same proportion, Cc is parallel to Qq. Hence the triangles pCc and pQq are similar; and therefore, by the terms of the theorem, pQ is equal to Qq and pC is equal to Cc. Also since Cc is parallel to

Digitized by Google

Qq it is parallel to XX. Hence the theorem. It may be noticed that the theorem is equally true if the point C is taken in Qp produced. Then of course c must be taken in qp produced.

The theorem may be extended to include the case where C is taken anywhere in the link. C is then to be regarded as the apex of a triangle of which PQ is the base. The corresponding position of c in the displaced path is fixed by the apex of a triangle, whose base is pq, and which is similar to the triangle pQC.

By means of these two theorems, all the point paths required in the determination of corresponding positions of the crank and the valve may be easily found in any type of valve gear.

Stating an example formally; given the dimensions of the Joy gear Fig. 145, find the 24 positions of the valve, that is of the point Y, corresponding to 24 equidistant crank positions. Before proceeding to apply the method to the gear, the following templates must be prepared, the general shape being similar to the template shown in Fig. 28.

1 template, 74″ radius, for suppression of the connecting rod.
1 template, 20″ radius, for the suppression of the rod RS.
1 template, $43\frac{1}{2}$″ radius, for the suppression of the rod YV.
1 template, $20\frac{9}{16}$″ radius, for the suppression of the rod VJD.

(1) Applying the corollary to Theorem (1), displace the circular path of the crank pin a distance KR along the line of stroke, and the straight path of the crosshead a distance QR along the line of stroke. The whole relative displacement in the direction of the line of stroke is thus equal to 74″, the length of the connecting rod, and the path of Q therefore becomes the diameter of the crank pin circle which coincides with the line of stroke produced, as indicated in Fig. 146. Divide the circle into 24 equidistant crank positions, and project them by the proper curved template on to the path of Q. Thus, point k is shown projected to point q by the dotted curve.

(2) Apply Theorem (2) to find the path of R. Consider the crank position No. 9, and lettered k. Join k to the corresponding position of q, and take the point r so that

$$kr : rq = KR : RQ = 49 : 25.$$

Then r is a point on the path of R. Repeat the construction for correspondingly numbered points, and sketch in the path of R.

(3) Now fix the attention upon the link RDS. The path of R is known and also the 24 points on it corresponding to the 24 equidistant crank positions. It is required to find the

Digitized by Google

corresponding series of points on the path of S. Applying Theorem (1), displace the path of S vertically through a distance equal to SR. If a vertical line be drawn through the fixed point F, Fig. 145, and a point f be taken above it, so that Ff is equal to the length

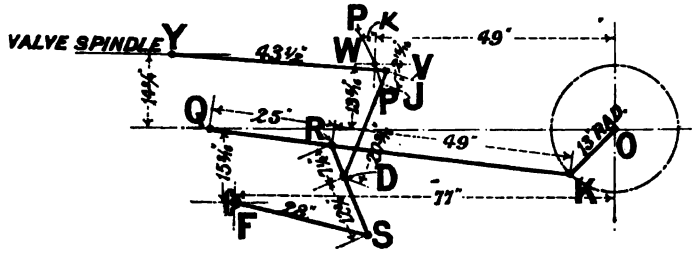

Fig. 145.

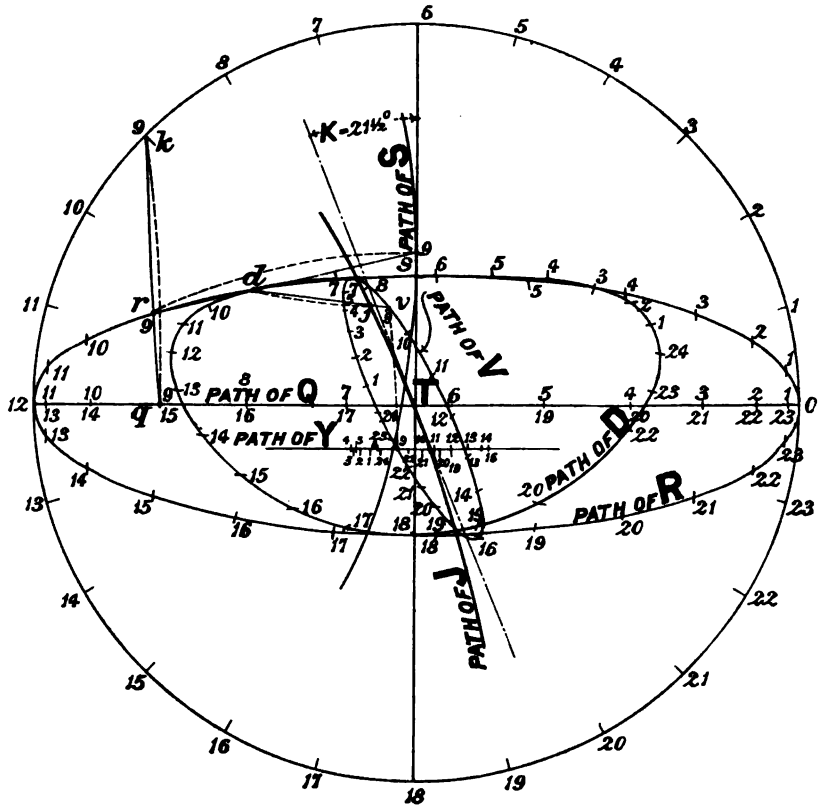

Fig. 146.

JOY GEAR. POINT PATHS OF GEAR SHOWN IN FIG. 140, THE DIMENSIONS OF WHICH ARE GIVEN IN FIG. 145.

Digitized by Google

of the link SR, an arc struck from f as centre with radius FS, will represent the path of S, displaced vertically, through a distance RS. Then with the proper template, project the 24 points from the path of R on to the path of S. The point r is shown so projected to s. (The positions of the other points on S are omitted to avoid confusion.)

(4) Apply Theorem (2) to find the path of D. Considering the pair of points r and s, corresponding to No. 9 position, join them, and take the point d so that

$$sd : dr = SD : DR = 12\tfrac{3}{4}'' : 7\tfrac{1}{4}''.$$

Then d is a point on the path of D. Repeat the construction for correspondingly numbered points and sketch in the path of D.

(5) Consider now the link VJD. The path of D is known and 24 positions in it. The path of J is known when a particular value of κ is given. It is required to find the 24 positions on the path of J corresponding to the 24 positions on D, and also to find the path of V and the 24 corresponding positions in it. Applying Theorem (1), the path of J is to be displaced vertically downwards, with regard to the path of D, through a distance JD. But D has already been displaced upwards a distance DR. Therefore J must be displaced downwards through a distance $JD - DR = 13\frac{5}{16}''$, thus bringing the centre W on to the centre of the circle. Let $\kappa = 21\frac{1}{2}°$. Then, draw the path as indicated and using the proper template, project the numbered points on the path of D to the path of J. The point d is shown so projected to j.

(6) Apply Theorem (2) to find the path of V. Considering one pair of points d and j, produce the line dj to v, taking v so that

$$dj : jv = DJ : JV = 20\tfrac{9}{16}'' : 2\tfrac{15}{16}''.$$

Repeat the process for correspondingly numbered points and sketch in the path of V.

(7) Since the path of V has been displaced vertically downwards through a distance $DV - RD = 16\frac{1}{4}$ inches, the path of Y has come down with it through the same vertical distance, consequently the path of Y is $1\frac{1}{2}$ inches below the centre line. Now, applying Theorem (1), displace the path of Y horizontally through a distance equal to YV, and using the proper template project the 24 positions from the path of V on to it. The point v is shown so projected.

Digitized by Google

Thus, 24 positions of the valve are known for 24 equidistant crank angles, and therefore the corresponding displacement curve can at once be set out.

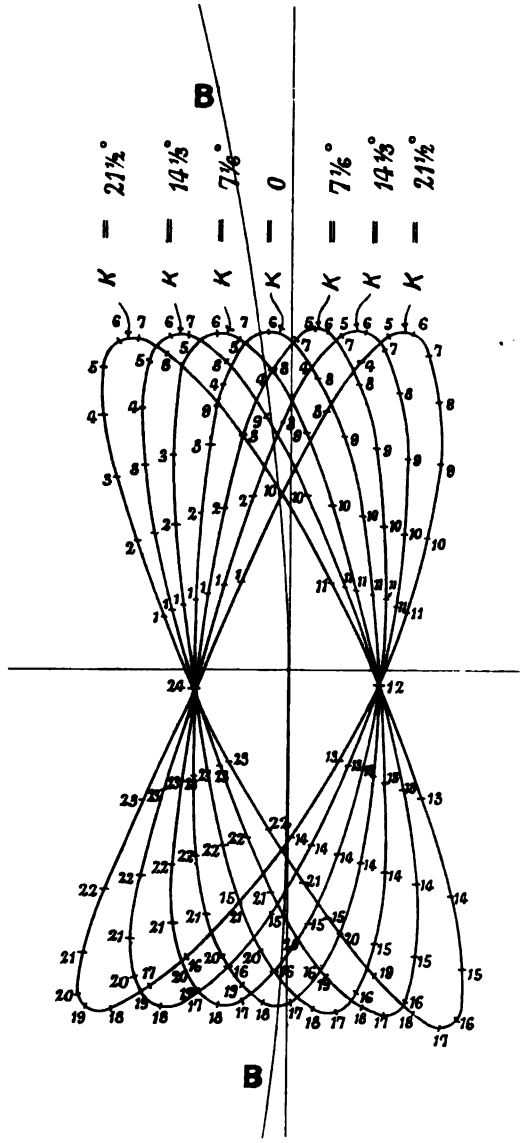

Fig. 147. Joy Gear. Paths of Point V, Fig. 145.

A somewhat more convenient way of getting the positions of Y, from the path of V, is to draw an arc, with radius YV, through the point T, constructing what is called a "big end base" in Article 37.

Digitized by Google

Then, the horizontal distance between any point on the path of V and this arc, is the corresponding displacement of the valve.

Fig. 147 shows the paths of V corresponding to the values of κ already specified. The arc BB represents the "big end base," so that the horizontal distance from this curve to any of the numbered points on the paths gives at once the displacement of the valve for the value of κ to which the path corresponds, when the crank occupies the correspondingly numbered position.

128. Joy gear continued. Approximate theory. Fig. 145. Neglecting the obliquity of the connecting rod, the horizontal displacement from the central position of every point on the rod is given by

$$OK \cos \theta.$$

This is therefore the horizontal displacement of the point R from its central position.

Again, the point S may be assumed to move in a vertical straight line without introducing sensible error, so that the horizontal displacement of the point R from its central position multiplied by the ratio $DS : RS$, is the horizontal displacement of D.

The lever DJV reduces the horizontal displacement of D in the ratio $VJ : JD$, so that finally, the horizontal displacement of V from its central position, when the path PP is vertical, is given approximately by

$$-\frac{VJ \times DS \times OK}{JD \times RS} \cos \theta \text{.....} (1).$$

The minus sign is prefixed because an inspection of the drawing of the gear will show that the displacement is 180 degrees from angular agreement with the crank. This represents the 180 degree component of the motion of the valve in terms of the crank angle θ, and it is the actual motion when the path is vertical, that is to say, when the motion is put in mid-gear.

The magnitude of the 90 degree component depends upon the movement of J above and below the centre W, of the path PP. With proper proportions of the links, the mid-position of this vertical displacement is as nearly as possible at the point W. The actual vertical distance of the point R above or below the line of stroke of the piston for a given value of the crank angle θ is

$$\frac{QR}{QK} \times OK \sin \theta,$$

and neglecting the obliquity of the rod DJ, this also gives the approximate vertical displacement of the point J, from its central position W.

Digitized by Google

When the path PP is inclined to the vertical κ degrees, the horizontal projection of the displacement, on a horizontal line through J, is therefore approximately

$$\frac{QR}{QK} \times OK \sin\theta \times \tan\kappa \quad \text{.....(2).}$$

The actual magnitude of the projection is increased in the ratio $VD : JD$ because so far as this component is concerned the lever VJD is turning about the fulcrum D. Hence the whole displacement x is given approximately by

$$x = -\frac{VJ \times DS \times OK}{JD \times RS}\cos\theta \mp \frac{VD \times QR \times OK}{JD \times QK}\tan\kappa \sin\theta \quad \text{.....(3).}$$

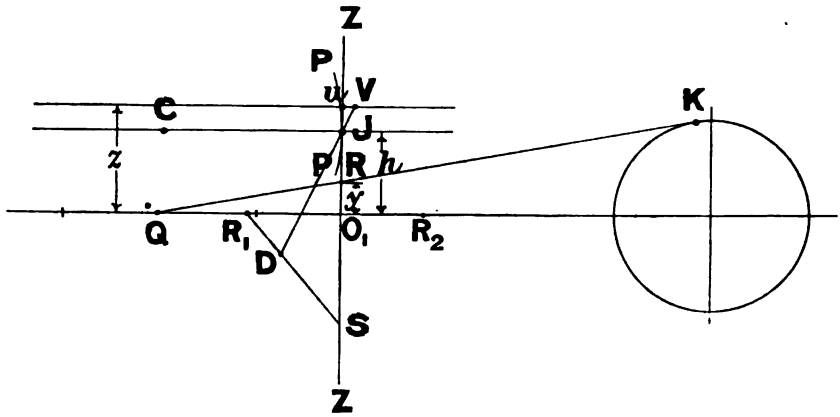

Fig. 148. Joy Gear. Design.

The minus sign before the second term is to be used when the path is inclined to the left of the vertical through W, and the plus sign when it is inclined to the right. The former position corresponds to forward gear. Hence for the Joy gear

$$A = -\frac{VJ \times DS \times OK}{JD \times RS} \quad \text{.....(4)}$$

and

$$B = \mp \frac{VD \times QR \times OK}{JD \times QK}\tan\kappa \quad \text{.....(5).}$$

Using the dimensions of the Lancashire and Yorkshire gear shown in Fig. 145, the expression reduces to

$$x = -1{\cdot}184\cos\theta - 5{\cdot}019\tan\kappa\sin\theta \quad \text{.....(6).}$$

Giving κ the value $21\frac{1}{2}$ degrees, corresponding to full gear, the expression becomes

$$x = -1{\cdot}184\cos\theta - 1{\cdot}97\sin\theta \quad \text{.....(7).}$$

Digitized by Google

When $\kappa = 0$, the mid-gear condition,

$$x = 1{\cdot}184 \cos \theta \quad \text{.....(8).}$$

The curves corresponding to the equations (7) and (8) are shown by chain dots on the valve diagram, Fig. 142. Comparing these with the actual curves they purport to represent, the extent to which the approximate theory is useful may be estimated.

129. Design of the Joy gear. The actual design of a gear is somewhat tentative, but the following method will probably be found useful.

(1) Find the equivalent eccentric for the cut off, maximum opening, and lead desired, and calculate the values of A and B.

(2) Set out the crank circle and the centre line of the stroke, Fig. 148, and find a point on the connecting rod so that its vertical distance, y, above the projection of its central horizontal position on the line of stroke, is given by

$$y = \frac{B}{\tan \kappa} \times \frac{JD}{VD}.$$

In order to calculate y some value of the ratio $JD : VD$ must be assumed. From 0·8 to 0·87 may be taken in the preliminary design of the gear for locomotives. Thus in Fig. 148 R_1, R_2 are the positions occupied by the point R on the connecting rod, when the crank angle is zero and 180 degrees respectively, O_1 is the projection of the central horizontal position of R, and y has the value given above. Draw a vertical ZZ through O_1 and set out the centre line of the valve spindle at some convenient distance z above the line of stroke.

(3) Take the link RS any convenient length, but long enough to prevent the angle between its two extreme positions exceeding 90 degrees. If possible the angle should be less than 90 degrees. The radius rod FS, Fig. 140, may now be sketched in, any length being taken, and the fixed point being put to the right or left of the centre line as may be most convenient, but arranged to guide the point S as nearly as may be in the vertical straight line.

(4) The position of the point D, and the position of the fixed centre W, must now be chosen to fulfil the two conditions of Article 121; together with the condition that the horizontal motion of V, to either side of the central position, must be equal to A, the lap plus the lead.

Digitized by Google

If h is the height of W above the line of stroke, and y_1 is the vertical distance of R above the line of stroke when the links SR and DJV are on the line ZZ, the highest position of J above the line of stroke is

$$y_1 - RD + DJ,$$

and the lowest position of J when the connecting rod is below the centre line is

$$-y_1 - RD + DJ.$$

The mean of these two values must be equal to h, if the second condition of Article 121 is to be fulfilled, that is

$$h = DJ - DR.$$

Other equations may be formed, which, combined with the conditions already stated, enable the position of D to be found by calculation, but the expressions become so complicated that they are not of much practical use.

The most convenient way to find D, and at the same time h, so that all the conditions are satisfied, is by the following tentative graphical method. First, set out a distance uV, equal to A, the lap plus the lead, on one or other side of the vertical ZZ, and on the line of stroke of the valve. Then, draw RS in the position corresponding to $\theta = 0$ or 180 degrees, take any point D on the link R_1S and join it to V, cutting the vertical ZZ in the point J, thus fixing some value of h. Then try if $DJ - DR_1 = h$. After a few trials a position of D will be found which does satisfy this condition, fixing thereby the proper value of h and the position of the fixed axis W, which of course in the position of the gear used to find D, is coincident with J.

Then, not only does this position of D satisfy the second condition of Article 121, but it satisfies the other conditions also, so that the fixing of D is really a crucial point in the design of the gear.

(5) The point J now represents, and coincides with, the fixed axis W of the path PP. Select some suitable value for the length of the valve rod VY; draw a line through J parallel to the line of stroke of the valve, and from a centre C in this line and with radius VY, draw an arc through W. This arc is the mid-gear position of the path in which J slides. Or C is the mid-gear position of the centre of the radius link guiding J, when the gear is arranged as shown in Fig. 141.

A gear set out in this way will give approximately the distribution

Digitized by Google

fixed upon and the leads for both strokes will be constant. What the actual distribution will be can only be found by drawing the actual displacement curves.

If found more convenient the link *RS* may be replaced by a link *RD*, the point *D* being connected to a return crank on the main crank.

130. Reversing by the interchange of the steam and exhaust pipes. The difference between inside and outside steam admission has already been explained in Articles 18 and 43. With outside steam admission, the eccentric sheave must have an angular advance greater than 90 degrees; with inside admission, the angular lag must be less than 90 degrees. If the angular advance is less than 90 degrees in the first case and the angular lag is greater than 90 degrees in the second case the slide valve cannot effect a distribution of steam suitable for driving the engine.

Suppose, that in an engine fitted with a slide valve of the ordinary type, and arranged for outside steam admission, the steam supply is suddenly interchanged with the exhaust, that is to say, steam is conveyed from the engine by the steam pipe and conveyed to the engine through the exhaust pipe. What would happen? If the angular advance of the eccentric sheave were greater than 90 degrees the effect of the change would be to stop the engine, because after the change the angular advance would become an angular lag greater than 90 degrees, so that the engine would not run. If however the angular advance were just 90 degrees (the valve having therefore no steam lap and no lead being possible) the interchange converts the 90 degrees angular advance into 90 degrees angular lag. The engine would therefore run in the opposite direction on the admission of steam through the exhaust pipe. In neither case however would the engine be able to use steam expansively, and this is the price which must be paid for the convenience of the method.

Thus, providing that the angular advance of the eccentric sheave is made 90 degrees, an engine may be reversed by simply admitting steam through the exhaust pipe and exhausting through the steam pipe. The design of the valve must be such as will allow of this change, because with inside steam admission the pressure tends to lift the valve off the face; the form of the valve must be modified accordingly. In order to interchange the functions of the two pipes they must be connected to a controlling valve, itself designed on the same principle as a slide valve. The arrangement is diagrammatically illustrated in Fig. 149. The ends of the two pipes, *A* and *B*, are brought together in the casing of the controlling valve, and formed into steam

Digitized by Google

ports, *a* and *b*, precisely as in the valve chest of a steam engine. Lying between these ports is an exhaust passage *E*, leading directly into the exhaust pipe. Steam is brought to the controlling valve casing through the pipe *S*, and a slide valve *C*, of the usual type, is placed over the ports. When the valve *C* is moved downwards, the bottom port *b*, and therefore the pipe *B* leading to the central port of the cylinder, is placed in communication with the exhaust pipe *E*, whilst at the same time the pipe *A* is in direct communication with the steam in the controlling valve casing through the open port *a*.

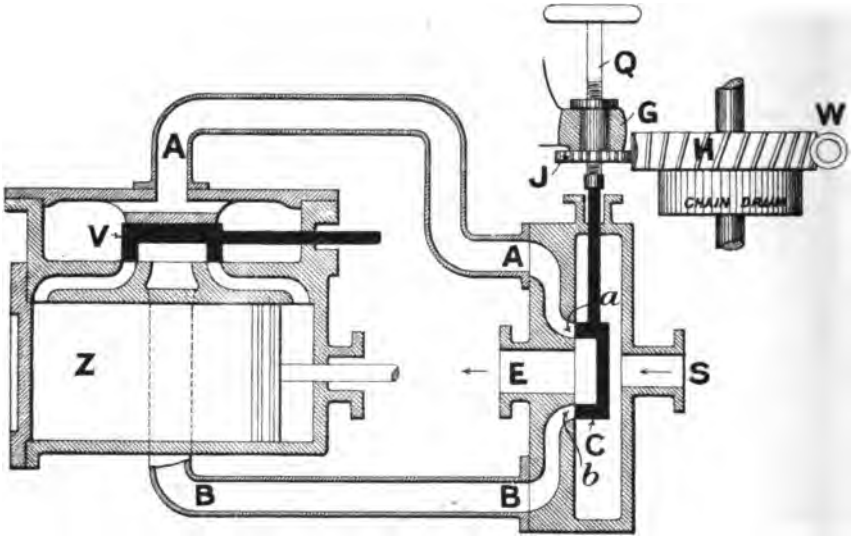

Fig. 149. Reversal by interchange of the Steam and Exhaust Pipes. Diagram of Steam Connections in combination with "hunting gear."

With the controlling valve in this position the engine therefore runs with outside steam admission and turns so that the eccentric sheave is in front of the crank.

Suppose now, that the controlling valve is moved up; the pipe *A* is placed in communication with the exhaust port *E*, and a way for the steam supply is opened through the port *b*, and the pipe *B*, into the inside of the slide valve *V*. The engine will therefore run in a direction where the eccentric sheave is behind the crank, being in fact reversed. Hence the engine can be reversed by merely moving the valve *C* up or down.

131. Steam steering gear. The combination of a "hunting gear" with this arrangement results in a useful and convenient mechanism,

Digitized by Google

a mechanism which is to be found on almost every ship, namely the steam steering gear. In the ordinary hand steering gear, a definite angular position of the rudder corresponds to a definite angular position of the steering wheel. The object of the steam steering gear is to interpose between the wheel and the rudder a motor, or mechanism, which will do the actual work of changing the rudder's position without breaking the geometrical relation between the wheel and the rudder. Consequently the man at the wheel has merely to carry out the steering operation as if no engine existed, with this difference however, that he can steer the largest ship with as much ease as he can steer the smallest boat, because between him and the rudder is a steam engine so connected up that it is obedient to the slightest turn of the wheel. It works whilst the wheel is being turned, it stops when the wheel stops, and starts only when the wheel starts to be turned. In fact it follows faithfully every motion of the steering wheel, seemingly always on the lookout to save the muscles of the steersman. Quite a small steering wheel is sufficient to steer with in this case, because all the work the steersman has to do is to overcome the slight friction of certain mechanism connected with the gear.

The combination is shown in diagrammatic form in Fig. 149. The tiller chains are wound on the drum H, and this has a worm wheel mounted with it, the worm wheel being driven by the worm W, which is connected directly or indirectly with the crank shaft of the engine belonging to the cylinder Z. Gearing with the wheel H, is a small wheel J, which forms part of a sleeve free to rotate in the fixed bearing G. The spindle Q, operating the controlling valve C, passes through this sleeve, engaging with it by means of a screw thread. J is in fact a nut to the spindle Q. When the nut J is at rest, a slight turn of the spindle Q moves the valve up or down and starts the engine in one direction or the other. Immediately the engine starts, however, the nut J begins to rotate, and in so doing brings the valve C back to its central position; and unless the spindle Q is turned at exactly the same rate by hand, as the nut J is turned by the engine, thus holding the valve C open, the engine will stop. In an actual steering gear the spindle Q is carried up and, by means of bevel gearing, brought on to the bridge in a position which allows the small steering wheel to be fixed in the usual fashion, namely, so that it turns about a horizontal axis.

Figs. 150 and 151 show a half sectional plan, and half sectional elevation, of a steering engine made by Messrs Alley and Maclellan, Sentinel Works, Polmadie, Glasgow, who have kindly allowed the gear to be illustrated. The figures are lettered similarly with Fig. 149. In

Digitized by Google

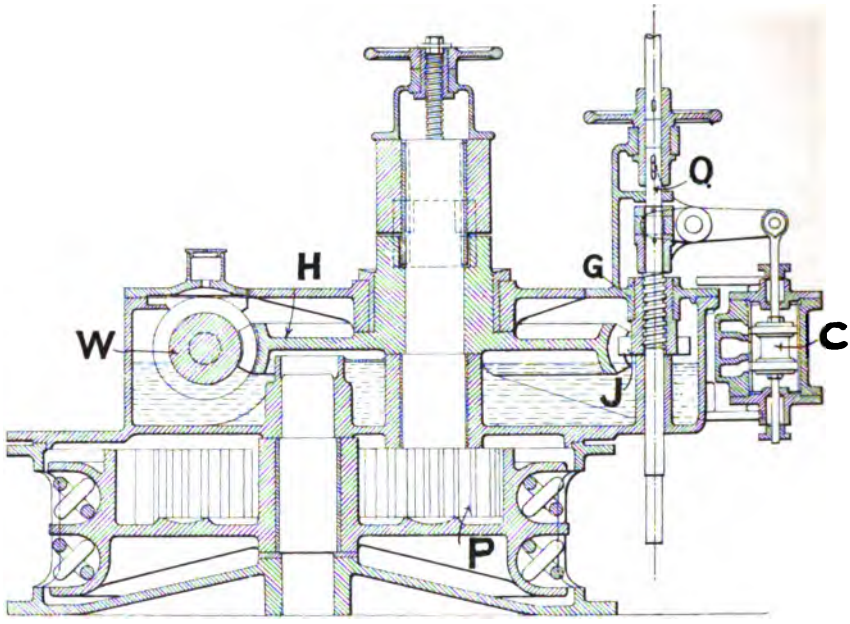

Fig. 150.

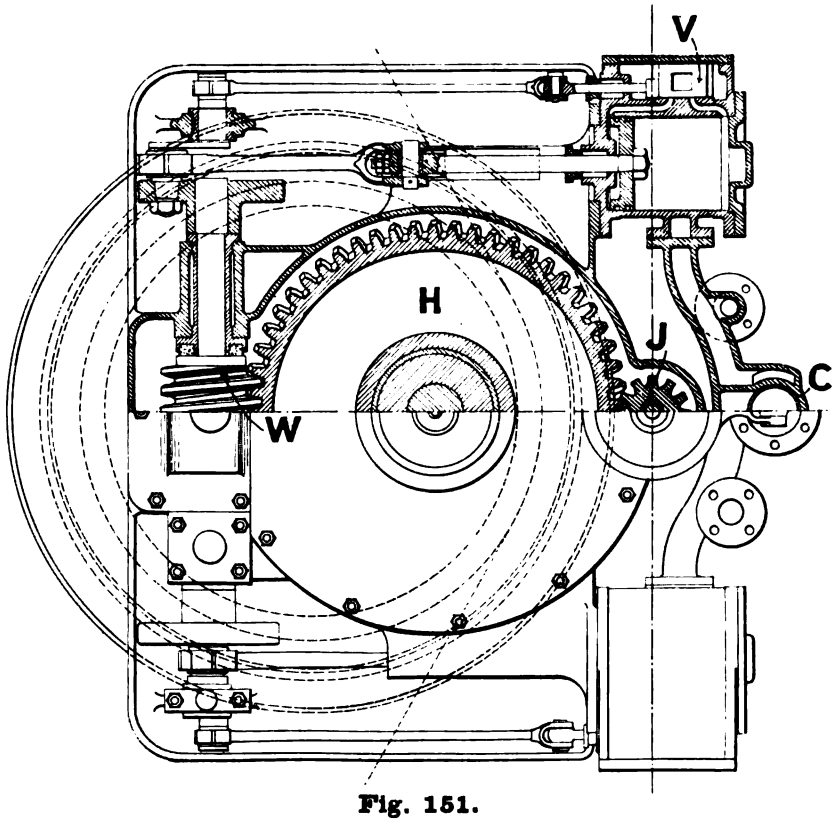

Fig. 151.

STEAM STEERING GEAR.

Digitized by Google

this case the slide valve V, of the steam engine, takes the form of the main valve of a Meyer valve gear, and the steam ports are brought out to the side of the steam chest. There is apparently only one pipe between the controlling valve and the steam chest, but this pipe is divided into separate passage ways corresponding to A and B of Fig. 149, and also contains the steam passage S and the exhaust passage E, the flanges for the connection of the steam and exhaust pipes being seen in the figure. The controlling valve C, Fig. 150, is made in the form of a piston valve. The hunting gear is clearly shown in the figure, the valve C being connected indirectly to the spindle Q through a rocking lever. In this illustration the chain drum is not formed with the worm wheel H but is geared to it through the pinion P.

132. Crank angles from which an engine cannot be started. When the stop valve is opened and steam is admitted to the steam chest of an engine which is at rest, it does not follow that the engine will start. The crank may have stopped in a position where the slide valve has cut off steam, in which case no steam can get to either end of the cylinder since the valve covers both steam ports. Consider first the case of a single cylinder engine. Let OC, Fig. 152, be the crank position at cut off, and OA the crank position at admission. Whilst the crank turns through the angle COA, the slide valve completely covers the steam ports and no steam can get into the cylinder. Hence if the engine should stop with the crank anywhere within the angle COA, the mere opening of the stop valve will not start the engine. Further, when steam is admitted at the crank position OA, the piston cannot exert an effective turning moment on the crank shaft in the positive direction, until the crank has passed through the 180 degree dead point to a position OB, where the torque due to the pressure on the piston is just greater than the torque resisting motion at the crank shaft. Let M be the torque at the crank shaft against which the engine is required to start, F the force along the connecting rod due to the steam pressure, r the crank radius; then, neglecting the obliquity of the connecting rod, the turning moment exerted by F on the crank is, $Fr \sin \theta$, and therefore at starting

$$Fr \sin \theta = M,$$

from which the value of $\sin \theta$ can be found when F and M are given. Hence, if the crank should happen to stop anywhere in the shaded angular region COB, the engine will not start when steam is turned on. The same considerations apply to the other cycle, so that C_1OB_1 is a second angular region from which the crank will not start. The diagram therefore shows that the crank must be brought to rest

Digitized by Google

somewhere in the unshaded regions, if the engine is to start when the stop valve is opened. Large, single cylindered, engines are provided with a barring gear, so that the engine crank can be turned into a starting position. In some types of barring gear steam is turned into the main engine, and into the small engine operating the gear, simultaneously. If the crank is in a non-starting position, the engine is driven round by the barring engine, which usually operates by a spur pinion in a large spur wheel incorporated with, and forming part of, the flywheel, until at a favourable crank position the main engine begins to drive the barring engine, but directly this happens the barring engine falls out of gear automatically.

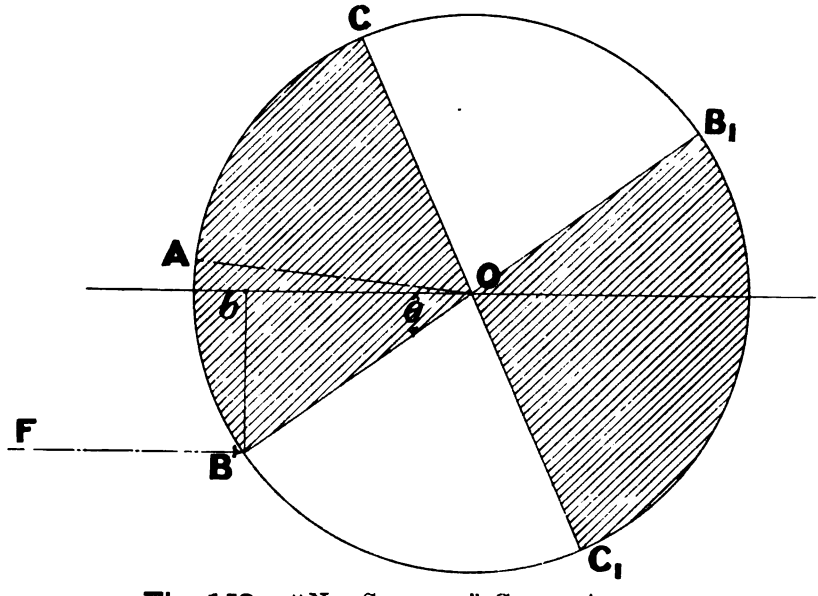

Fig. 152. "NON-STARTING" CRANK ANGLES.

If the valve is set to give an early cut off it will be perceived from Fig. 152, that the shaded area will be enlarged, and the unshaded area reduced, in angular dimensions, so that the range of crank positions from which the engine can be started by the admission of steam to the steam chest is reduced.

If the engine has two cranks at right angles, if the one stops in a non-starting region, the other generally stops in a starting position, though not always. This is an important question in connection with locomotives. Locomotives always have to be started with a load on them, and they must of course be able to start with the full load, from rest, on the steepest gradient over which they are required to work.

Digitized by Google

In these circumstances the angle θ may be so large that the angle COB becomes greater than a right angle. If this should happen, both cranks may come to rest within the shaded area and then the engine would not start. Fortunately, the shaded areas for the opposite direction of running occupy different angular positions on the diagram to those shown in Fig. 152; so that if the engine is reversed, the effect is to bring one of the cranks into a starting region. This point may be illustrated by an actual example in connection with the valve diagram, Fig. 86. By measurement from the diagram the following results are obtained:—

Fore gear (positive rotation of crank)	Crank angle
Instroke cycle. Cut off	124 degrees.
Outstroke cycle. Cut off	298 degrees.
Back gear (negative rotation of crank)	
Instroke cycle. Cut off	− 121 degrees.
Outstroke cycle. Cut off	− 297 degrees.

The minus sign, prefixed to the crank angles of the back gear, means, that the angle is to be measured out from the initial line in the clockwise direction.

Confining our attention at first to the fore gear positions, set out, Fig. 153, OC at 124 degrees with the initial line, and OC_1 at 298 degrees, both being measured out of course in the counter-clockwise direction. The position of OB is not easy to find. It may however be calculated approximately in the following way. The turning moment at the crank axle which must be overcome before the engine will start, is equal to the total train resistance, multiplied into the radius of the driving wheel. The total train resistance is made up of several factors. These are, the train resistance from rest, the engine and tender resistance from rest, the resistance to the gradient and sometimes a resistance due to a curve. Suppose the total train and engine resistance to be f pounds per ton. Then the starting resistance from this cause will be Wf pounds, W being the gross weight in tons of the train including engine and tender. If the incline is 1 in G, the resistance in pounds, due to it, is

$$\frac{W \times 2240}{G}.$$

Hence, the total resistance, neglecting the curve resistance, is equal to the sum of these two quantities; and if R is the radius of the driving wheel, the torque which has to be overcome to start the train is

$$RW\left(f + \frac{2240}{G}\right) = M.$$

Digitized by Google

If p is the maximum steam pressure, and A the area of the cylinder in square inches; F, the force along the rod, is pA lbs. The starting condition is then expressed by

$$pAr \sin \theta = M,$$

from which

$$\sin \theta = \frac{RW\left(f + \frac{2240}{G}\right)}{pAr}.$$

By way of example suppose the total weight of engine, tender and train to be 350 tons, and that the average starting resistance is 15 lbs. per ton. Let the train be standing on a gradient of 1 in 230, and suppose the engine cylinders are 18 inches diameter and 24 inches stroke, the steam pressure being 160 lbs. per square inch. Also let the diameter of the driving wheels be 7 feet. Substituting these values in the above equation it reduces to

$$\sin \theta = 0{\cdot}655,$$

from which $\theta = 40$ degrees.

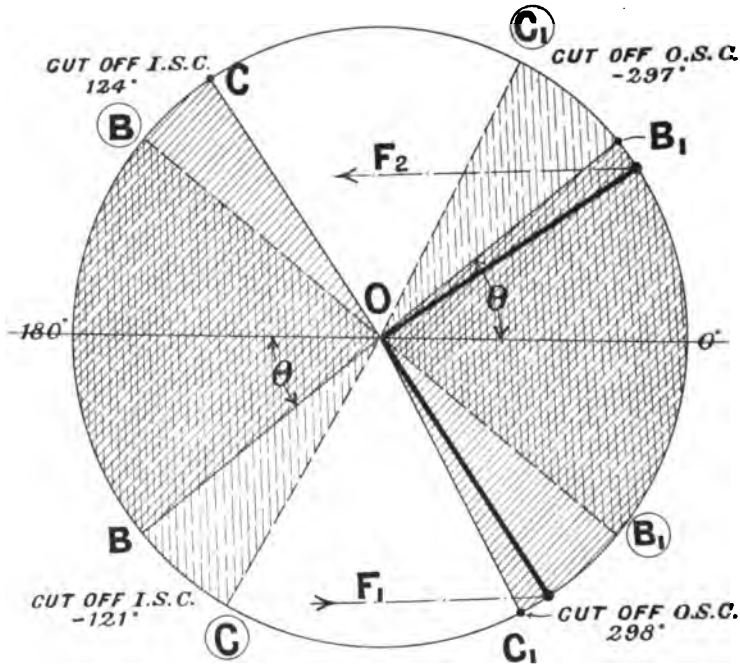

Fig. 153. NON-STARTING CRANK ANGLES WITH TWO CRANKS AT 90 DEGREES.

In Fig. 153 OB is set out at 40 degrees below the 180 degree dead point position, and OB_1 40 degrees above the 0 degree dead point

Digitized by Google

position, thus marking off the two angular non-starting spaces COB, and C_1OB_1, for the instroke and outstroke cycles respectively. In each case the angle is greater than 90 degrees and therefore the cranks may come to rest in a position where it is impossible to start the engine. The thick line represents one of these positions where the cranks have stopped in the outstroke cycle region.

These non-starting areas are cross-hatched with lines sloping at 45 degrees.

The lines OⒸ and OⒸ represent respectively the crank positions for cut off when the engine is reversed, OⒷ and OⒷ being the positions of the crank where the connecting rod can exert the necessary starting couple. The non-starting areas corresponding to these crank positions are cross-hatched with vertical lines.

It will be seen at once from this diagram that if the cranks stop in the position shown by the thick lines, the effect of reversing the engine is to bring the lower crank into a starting region, the upper crank however still remaining in a non-starting region.

In practice the effect of the draw-bar springs is to modify the angular dimensions of the diagram in favour of easier starting.

In compound engines, boiler steam is only admitted to the high pressure steam chest and if the valve happens to close the ports the engine cannot start. Starting valves have therefore to be fitted either to admit steam directly to the other cylinders or to the receivers between the cylinders. The steam in a receiver, for certain crank positions, is in communication, through the respective valves, with two pistons, and if acting to drive the larger, appears as a back pressure on the smaller. The actual effect is therefore that due to the receiver pressure, multiplied into the difference of the areas of the two pistons between which the receiver lies. There is no difficulty in starting marine engines under these conditions, because they never have to start under a full load. But with locomotives the case is entirely different. They must start under full load, and must start promptly. When compound locomotives were first introduced into this country the starting difficulty at once forced itself to the front.

One example may be given. Fig. 154 shows a diagrammatic section through the cylinders and starting valve of a Worsdell and von Borries two cylinder compound locomotive. The high pressure crank is supposed to have come to rest in such a non-starting position, that the high pressure slide valve covers both steam ports, but is open to the exhaust port. Hence, when the regulator is opened, no steam can get into the cylinder. In these circumstances, a small valve A is opened by the driver and steam makes its way, through the reducing valve D, to the

Digitized by Google

steam chest of the low pressure cylinder; and, assuming the low pressure crank to be in a starting position, and therefore one of the steam ports open, the steam will find its way into the cylinder and start the engine from the low pressure crank alone. To prevent the steam acting as back pressure on the high pressure piston, the valve *E* is closed, by the piston *C*, immediately the valve *A* is opened. Very soon after the

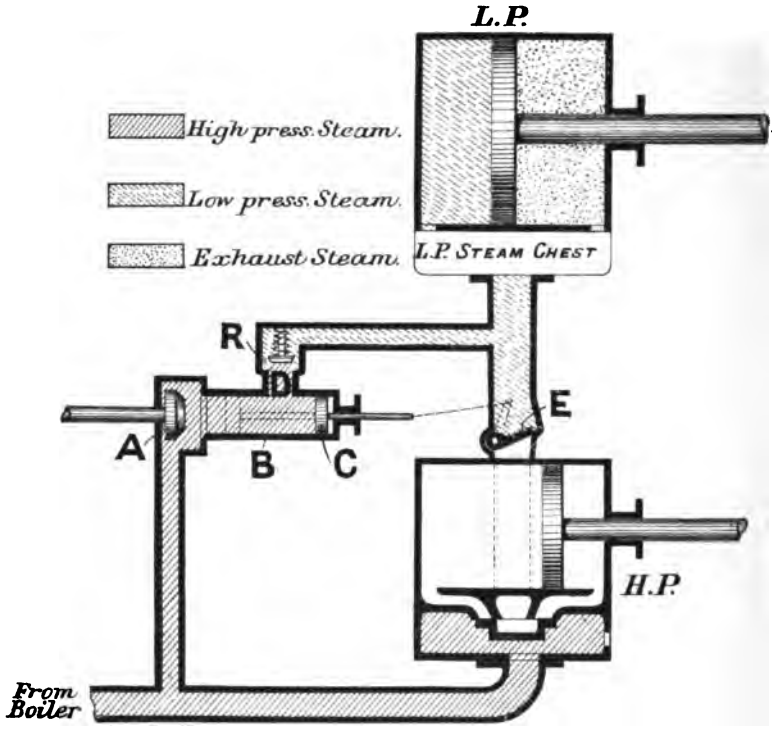

Fig. 154. DIAGRAM OF CYLINDERS, STEAM CONNECTIONS, AND STARTING VALVE. WORSDELL AND VON BORRIES TWO CYLINDER COMPOUND LOCOMOTIVE.

engine moves, steam is admitted to the high pressure cylinder, and when release takes place, the steam, which at release is at a higher pressure than the steam in the receiver pipe, forces open the valve *E* on its way to the low pressure cylinder, thereby pushing the piston *C* back to the dotted position *R*, and thus cuts off the steam to the low pressure cylinder automatically.

The actual arrangement of starting and intercepting valves is shown in Fig. 155.

Digitized by Google

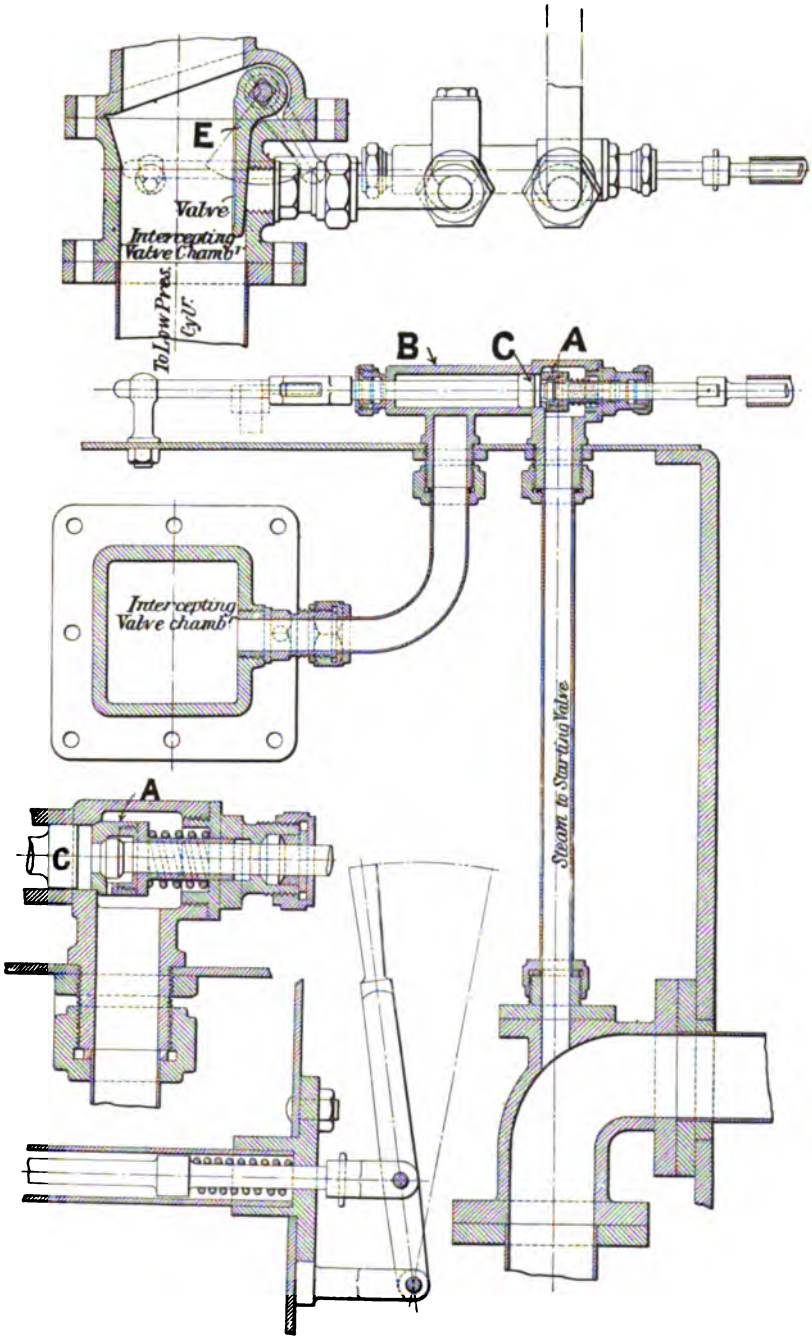

Fig. 155. DETAILS CORRESPONDING TO FIG. 154.

Digitized by Google

If it should happen that the low pressure crank stops in a non-starting position as well as the high pressure crank, then the engine must be reversed, so that one or other crank is in a starting position for backward running; if the high pressure, the engine will start when the regulator is opened; if the low pressure the starting valve must be opened as well as the regulator.

For further remarks regarding the starting of compound locomotives, see an article by the author, "The development of Compound Locomotives in England," *Engineering Magazine*, Sept. and Oct., 1904.

Digitized by Google

CHAPTER IX.

STATICAL AND DYNAMICAL PROBLEMS IN CONNECTION WITH THE DESIGN OF A VALVE GEAR.

133. The general problem. After the centre lines of a gear have been found so that the valve may effect the distribution of steam desired, various problems in connection with the mechanical design of the gear have to be solved. The first of these is to design the size of all the pins and joints so that the gear shall run cool, and the second is the design of the several links so that there shall be no danger of breakdown. Both these problems involve an estimate of the maximum forces which are likely to come on the joints, and the loads which the links have to transmit from one to the other. This estimate is generally based upon some calculated value of the force required to overcome the resistance of the steam valve to motion. Data in connection with slide valve friction have been cited in Chapter II. When designing the gear, the whole unbalanced surface exposed to the action of the steam should be multiplied into the maximum boiler pressure to get the force producing frictional resistance between the surfaces of the valves and the ports, and this should be multiplied by a suitable coefficient of friction to find the maximum frictional resistance of the valve, to be used in the design. Assuming this force to be known, the problem resolves itself into the determination of the loads on the joints of the valve gear, when the force acting along the valve spindle is given, and the point is specified at which the gear is driven.

But now a complicated question looms in view. When the engine is working so slowly that the acceleration of the motion of the various links forming the gear is small, the forces acting at the joints of the links are not sensibly different from those due to the overcoming of the force at the valve spindle. The problem in this case is merely a static one and the solution is straightforward and simple.

Digitized by Google

As the speed of the engine increases, the forces which must act on the several links to accelerate their motion increase rapidly from negligible amounts, to magnitudes which render it imperative to consider them. At high speeds, in fact, these accelerating forces are of paramount importance, and many breakdowns have occurred through neglecting to take them into account. The peculiarity of this problem is that it cannot be solved directly. A preliminary design of the gear must be made, based upon the forces acting due to the estimated valve resistance, and upon experience; and then each link must be weighed, and its mass centre and moment of inertia about its mass centre computed, before it is possible to find the accelerating forces. It becomes a trial and error method. The gear automatically loads itself as the speed increases, and any gear which is intended to run at high speeds, should be examined with respect to this inertia loading and the design of the links modified to meet the case. In order to fix our ideas, consider the Joy gear shown in Fig. 140. An important practical problem is to find the force acting at R, the driving point of the valve gear, because this force loads the connecting rod with a transverse load. In the solution of this problem the forces at all the other joints are found incidentally. The problem therefore splits up into two separate and distinct parts, thus:—

(1) The finding of the force at the joint R of the gear when the valve spindle load is given, assuming the speed to be so slow that the inertia loading of the gear is negligible.

(2) The finding of the force at the joint R due to the inertia loading of the gear, the weight and form of each link being assumed.

The actual force, corresponding to a given speed acting at any joint, is then the resultant of the forces due to (1) and (2), but as will be seen further on, the effect of the valve resistance, that is (1), can be found simultaneously with the determination of the inertia forces under (2).

The problem is further complicated by the effect of friction at the joints, but, assuming proper lubrication, the disturbance produced on the forces due to this cause may be neglected. Since the force at the joint R, both in case (1) and (2) above, is in a state of continuous variation, the only way to deal with the problem is to find the force for a series of positions of the gear. Once having worked through, say 24 positions, a matter of some perseverance, not to say tediousness, knowledge will have been obtained which will guide the judgment in subsequent cases without actually analysing them in such profuseness of detail.

Digitized by Google

134. Given the crank angle θ, and the force acting along the valve spindle, to find the force acting at the joint R of a Joy gear when the inertia loading is neglected. This problem is a statical one, and requires the use of the two following statical principles for its solution:—

(1) If a link carrying two joints is held in equilibrium by forces acting at the joints, the magnitudes of the resultants at the respective joints must be equal and opposite, and they must act along the line joining the two joints, neglecting the effect of the friction of the joints.

(2) If a link carrying three joints is held in equilibrium by forces acting at the joints, the forces must either be parallel or must meet in a point, and in each case the resultant of the three forces must be zero.

The method of applying these principles is most easily illustrated by taking an example.

Example. Find the forces acting on the joint R of the Joy gear, illustrated in Fig. 140, for full forward gear, the crank angle being θ and the force acting at the valve spindle being P_1.

Draw the gear in the configuration corresponding to a crank angle θ, as in Fig. 156, and draw the path PP in the full forward position. Whether the force P_1 required to move the valve involves a tension or compression of the valve spindle, is to be found from the valve diagram, because the diagram shows which way the valve is moving for a given crank angle. For the value of θ shown in the figure, the valve spindle is in tension, and the force P_1 acts as shown at the joint Y. The problem may perhaps be made more complete as an exercise by going one step further and finding the forces P_3, P_2 at the slide bars and crank pin respectively, which balance the action of P_1.

In consequence of the application of the force P_1, and the balancing force acting at R, there will be the following reactions from the framework of the engine, neglecting the effect of friction:—

(1) The normal reaction of the slide at $Y = U_1$.

(2) The normal reaction of the path PP, at $J = U_2$.

(3) The reaction of the joint F, which must have the direction of the link FS by principle (1).

By principle (1), the resultant of P_1 and U_1 must be equal and opposite to the force at V, and must act along YV. Set out Oa, Fig. 157, to represent P_1 to some scale: draw Ob parallel to U_1 and ab parallel to YV. Place an arrow head on Oa, indicating the direction of P_1's

Digitized by Google

action, and follow the direction it indicates round the triangle, in this way discovering the sense of *ab* and *bO*. Then the triangle shows that a force represented by *ab* acts *from* the joint *Y* along the rod *YV*, and a force represented by *bO* acts *from* the slide at *Y*, *to* the joint.

Again, fix the attention on the joint *V*. The force acting at *Y* is necessarily accompanied by an equal and opposite force acting at *V* by principle (1). Hence cross out the arrow head on *ba* and place another, pointing in the opposite direction, to indicate the change of the force

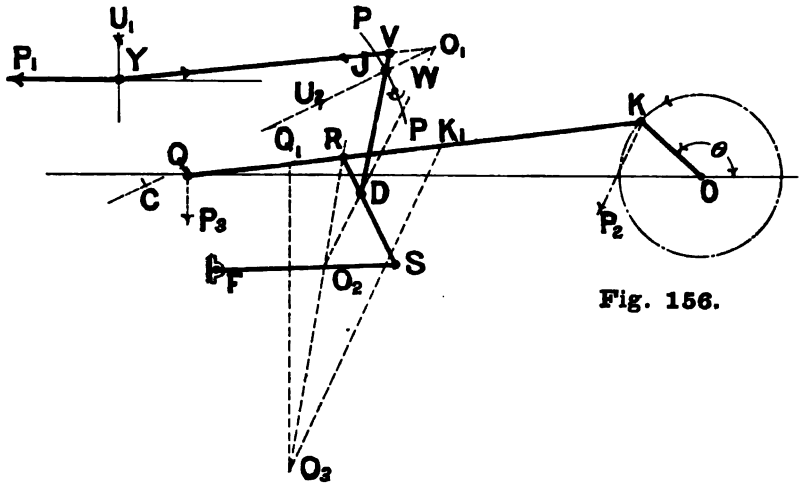

Fig. 156.

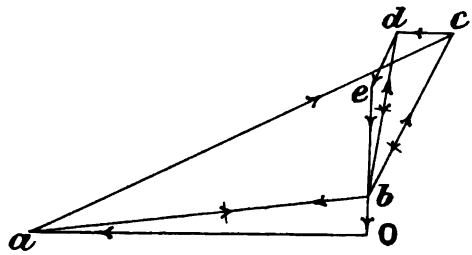

Fig. 157.

JOY GEAR ILLUSTRATED IN FIGS. 140 AND 142. FORCE DIAGRAM.

to *ba*. The link *VJD* is held at rest by forces acting at the three points *V*, *J*, and *D*. Of these forces that at *V* is completely known, that at *J* is known in direction, being normal to the path *PP*. By principle (2) therefore, the forces through *V*, *J* and *D* must meet in a point. Produce the normal at *J* to meet the direction of *YV* produced, in O_1: join O_1 to *D*, thus fixing the direction in which the force at *D* must act. Returning to the force diagram, Fig. 157, draw *ac* parallel to JO_1, and through the point *b* draw *cb* parallel to O_1D. Follow round the direction of the new arrow head on *ba*, and the

Digitized by Google

directions in which the forces must act, *from* without, *on* the link VJD, are at once shown; so that ac is the force acting *from* the path PP *to* the joint J, and cb is the force acting at the joint D, *from* the joint *to* the link DJV.

Again, the link RDS is held in equilibrium by forces at R, D and S. Of these, the force at D is known in magnitude and direction, being represented by bc, the arrow head being reversed as before; the force at S is known in direction, being along the link SF. Therefore, produce the force through D, to cut the link FS in O_2, then O_2 is the point through which the three forces acting on RDS must pass. Hence join O_2 to R, thus fixing the direction in which the force at R must act. Returning again to the force diagram, through the point c, draw cd parallel to SF, and through the point b, draw db parallel to RO_2. Follow round the direction of the reversed arrow head on bc, then, cd represents the force acting *from* the link FS *to* the joint S, the direction of the arrow showing that the link is in tension for the value of θ taken; and db shows the force acting at the joint R. For practical purposes this is the force of interest in the design of the gear, because, resolving it along and at right angles to the connecting rod, the value of the normal component is at once found, and it is this component which causes bending of the rod.

Forces at Q and K are found in a similar manner, but here a point of interest arises in connection with the application of principle (2) to the connecting rod. The point at which the direction of the force through R, meets the force P_3, is practically inaccessible. The difficulty is easily surmounted, however, by taking Q_1 and K_1 conveniently near to R, so that Q_1RK_1 represents the rod to a smaller scale. Then the point O_3 is found for this small scale rod, and O_3K_1 is the direction of the force through K_1. But this must also be the direction of the force through K, since the mere alteration of the scale cannot affect the direction of the forces. Hence a line parallel to O_3K_1 drawn through K, gives the direction required. In the force diagram, Fig. 157, the triangle bde corresponds to these directions.

The scale of the force diagram is fixed when an actual value is assigned to P_1, because this fixes the number of units in the line Oa of the diagram. The maximum value P_1 is likely to assume for any given crank angle, can generally be estimated with fair accuracy, care being taken to make the estimate err on the right side. Examples of the value of P_1 have been cited in the case of a locomotive in Article 24.

If a diagram like Fig. 157 be drawn for 24 positions of the crank, the varying values assumed by the different forces can easily be followed and the maximum value found in each case.

Digitized by Google

135. Given the speed of the crank shaft and the instantaneous value of the crank angle θ, to find the force at the joint R, Fig. 156, due to the inertia loading of the valve gear. In solving this problem it is convenient to draw, first, a velocity diagram from which the magnitude of the velocity of any point in the gear can be scaled off; secondly, an acceleration diagram from which the acceleration of any point in the gear can be scaled off. From these diagrams, and the application of certain dynamical principles which will be explained in due course, the required force can be found.

136. To draw a velocity diagram for a given mechanism*. The drawing of a velocity diagram for a mechanism depends upon a kinematic principle concerning the motion of a rigid body in a plane, which may be thus stated:—

> If a link QK, Fig. 158, has motion in its own plane, and the velocity of any point in it, as Q, be given in direction and magnitude, then, the velocity of any other point K on the link is the vector sum of the velocity of Q, and the tangential velocity of K turning about a line through Q, at right angles to the plane of motion, as axis.

Take any origin V and let the vector Vq, Fig. 159, represent the velocity of Q. Then, a line drawn at right angles to the line joining Q and K must represent the direction of the tangential velocity of K turning about Q as axis. Let qk indicate the velocity's magnitude and way of action, then Vk, the vector sum of the velocity of Q and the tangential velocity of K about Q, is the velocity of K.

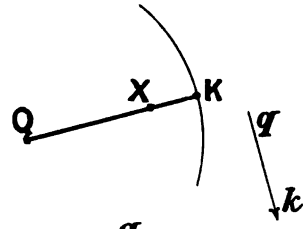

Fig. 158.

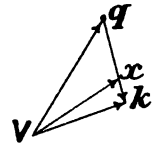

Fig. 159.

VELOCITY DIAGRAM.

For whether the point Q is moving or is at rest, the only motion which

* The method of drawing velocity and acceleration diagrams used in this and in the following articles is that given by Prof. R. H. Smith in *Graphics*, published by Longmans, Green and Co., and originally communicated to the Royal Society of Edinburgh in 1885.

Digitized by Google

K can have relatively to it is one at right angles to QK, since the line joining K and Q is supposed to be unalterable in length. If there is no turning about Q, every point in the bar moves in a parallel path, and the translational velocity impressed on Q is common to every point in the body. Hence, when there is turning in addition, the velocity of K is compounded of the common translational velocity Vq, and the tangential velocity about Q.

If ω is the angular velocity of QK, the magnitude of the tangential velocity of K about Q as axis is

$$\omega \times QK = qk.$$

Hence
$$\omega = \frac{qk}{QK}.$$

So that when the velocity triangle Vqk is once found, the angular velocity of the link can be deduced from it by the above relation, if it is not already known.

There is a further property of this velocity triangle which is useful.

> If points X, x, are taken, dividing the link QK, in Fig. 158, and the tangential velocity qk, in Fig. 159, respectively in the same proportion, then Vx represents the velocity of the point X in magnitude and direction.

Because, applying the previous proposition, the velocity of X is the vector sum of the velocity of Q and the tangential velocity of X about Q. That is the vector sum of Vq and $\omega \times QX$, in a direction at right angles to QX.

Therefore the lines representing the tangential velocities of K and X must be in the proportion of $QX : QK$. Thus, qx represents the tangential velocity of X about Q, and therefore Vx represents the velocity of X. In the application of these principles to mechanisms, the problem is reduced to the drawing of the velocity triangle for each link of a mechanism. Since each joint of a mechanism is common to two links, adjacent links will have a common side in their respective velocity triangles, and it will be found that the velocity diagram of a chain of links consists of a series of lines, radiating from a point, giving the velocities of the points of the various links, the lines joining the ends of these lines being the respective tangential velocities.

It frequently happens that of the six elements in the drawing of the velocity triangle of a link, four of which must be given, the magnitude and the direction of one side is given completely, that is the velocity of one point in the link is completely stated, and the directions of the remaining two sides are given. The direction of the tangential velocity is always known directly the position of the link is given, since it is always at right angles to the link.

Digitized by Google

137. Example. Apply this to the simple case of a crank and connecting rod, Fig. 160, to find the velocity of Q, the crosshead, the velocity of K, the crank pin, being supposed given.

Take any point V, Fig. 161, and draw Vk in the direction of the velocity of K, which will be at right angles to the crank pin. From V, draw Vq parallel to the direction in which Q moves, that is parallel to the line of stroke. The remaining side of the triangle must be at right angles to the rod. Draw kq, therefore, at right angles to the connecting rod, thus fixing the point q. Vq now represents the velocity of the crosshead Q to the same scale that Vk represents the velocity of the crank pin K. Let R be any point on the connecting rod. Divide qk in r so that $QR : RK = qr : rk$. Then Vr represents the velocity of the

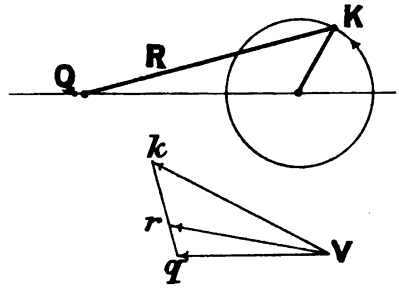

Fig. 160.

Fig. 161.

VELOCITY DIAGRAM. CRANK AND CONNECTING ROD.

point R in magnitude and direction. Since qk may be looked upon as a scale drawing of the rod always at right angles to the actual position the rod occupies, it has been called the **velocity image of the rod.** The line joining any point on the image to the pole V, represents the velocity of the corresponding point in the actual link, in magnitude and direction.

138. To draw an acceleration diagram for a given mechanism. The drawing of this diagram depends upon a kinematical principle regarding motion in a plane which may be thus stated :—

> If a link QK, Fig. 162, has motion in its own plane, and the acceleration of any point K in it be given in magnitude and direction, the acceleration of any other point Q is the vector sum of the acceleration of K, the radial acceleration of Q about K as axis, and the tangential acceleration of Q about K as axis.

Thus, if the vector Ak, A being an origin taken anywhere, represents the acceleration of the point K, then kt, representing the radial acceleration of Q about K, must be drawn parallel to QK, from Q towards K, and tq, representing the tangential acceleration of Q about

Digitized by Google

K, must be drawn at right angles to QK. Assuming the magnitudes of kt and tq to be known, the sum of these three vectors is Aq, and this is the acceleration of the point Q.

Fig. 162.

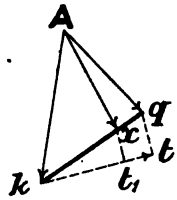

Fig. 163.

ACCELERATION DIAGRAM.

It will be observed that the directions of the radial and tangential accelerations are known directly the position of the link is known. With regard to their magnitudes, the magnitude of the radial acceleration is expressed by

$$\frac{v^2}{KQ},$$

v being the velocity of the point Q about the axis K. This velocity can always be found from the velocity diagram; it is represented in the case of Fig. 161 by the line qk. If $\dot{\omega}$ is the angular acceleration of the link,

$$\dot{\omega} \times KQ$$

is the tangential acceleration of the point Q about K. In general this angular acceleration is unknown in magnitude, and it becomes part of the problem to determine it. It will be observed, that the acceleration of the link is determined by the drawing of a four-sided figure, so that enough data must be given to settle the value of all but two of the quantities concerned in the setting out of the figure.

It is also important to notice that if the acceleration quadrilateral is obtained, the angular acceleration of the link it corresponds to can always be found from the magnitude of the tangential acceleration. Thus, if tq represent the tangential acceleration,

$$\dot{\omega}, \text{ the angular acceleration of the link} = \frac{tq}{KQ}.$$

A second proposition with regard to the diagram is:—

If points X and x are taken, dividing the link QK and the whole acceleration of Q about K, namely qk, in the same ratio, then Ax represents the acceleration of the point X, in magnitude and direction.

Digitized by Google

Referring to the Fig. 163, draw xt_1 parallel to qt. Then if ω and $\dot{\omega}$ are respectively the angular velocity and the angular acceleration of the link,

the radial acceleration of X about K is, $\omega^2 KX$,
the angular acceleration of X about K is, $\dot{\omega}\, KX$.

Therefore in the acceleration diagram the lines respectively representing these quantities will be respectively proportional to KX, whilst the lines respectively representing the radial and tangential accelerations of Q about K will be proportional to KQ. Therefore in the diagram the condition must be satisfied,

$$kt : kt_1 = tq : t_1x = KQ : KX.$$

Hence x divides qk in the same ratio that X divides KQ.

The drawing of the acceleration diagram for an ordinary four-bar chain well illustrates the application of the method in general, and in particular illustrates the construction which has to be applied successively to the links to find the acceleration diagram for a Joy gear.

139. To draw the acceleration diagram of a four-bar chain for a given configuration. Let B, C, D, E, Fig. 164, be a four-bar chain, the link DB being fixed; and assume the crank BC to revolve with uniform angular velocity ω.

It is first necessary to draw the velocity diagram. The velocity of the point C is ωBC. Let this be represented in magnitude and direction by the vector Vc, Fig. 165, V being any origin. Vc is drawn at right angles to the crank BC, and its length to scale is equal to ωBC.

The tangential velocity of the point E, about C as axis, is in a direction at right angles to the link CE, and the direction of its actual velocity is at right angles to the link DE. Accordingly, complete the velocity diagram by drawing lines ce and Ve at right angles respectively to the links CE and DE. The intersection at e then defines the magnitude of the velocity of E and its tangential velocity about C.

Measuring these velocities to scale the radial acceleration of E about C is

$$\frac{ce^2}{CE}, \text{ in the direction } EC,$$

and the radial acceleration of E about D is

$$\frac{Ve^2}{DE}, \text{ in the direction } ED.$$

The acceleration diagram may now easily be drawn. Take any origin A, Fig. 166, and remembering that the acceleration of E, about C, is the

Digitized by Google

vector sum of the acceleration of C, the radial acceleration of E about C, and the tangential acceleration of E about C, and also that since BC revolves uniformly in a circle the acceleration of C is $\omega^2 CB$, in the direction CB:—

Set out, Fig. 166, Ac equal to $\omega^2 CB$ in a direction parallel to CB, to represent the acceleration of C: ct equal to the radial acceleration of E about C, the magnitude of which has just been found, in a direction parallel to EC; tx, at right angles to CE, giving the direction of the tangential acceleration of E about C, its magnitude being unknown.

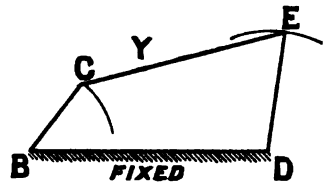

Fig. 164.

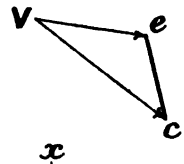

Fig. 165.

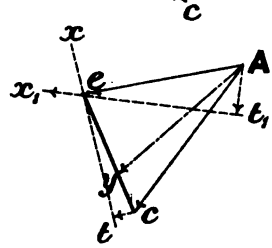

Fig. 166.

FOUR-BAR CHAIN. VELOCITY AND ACCELERATION DIAGRAMS.

Again, consider that the point E belongs to the link ED. Its acceleration is the vector sum of the acceleration of D, which is zero, the radial acceleration of E about D, which has just been found, and the tangential acceleration of E about D which is known in direction only. Starting from the origin A, therefore, set out At_1 parallel to ED to represent the radial acceleration of E about D, and t_1x_1 at right angles to ED, giving thereby the direction of the tangential acceleration of E about D. The intersection e of these two lines defines the respective magnitudes of the tangential accelerations of E about C, and of E about D. Hence Ae is the acceleration of the point E. Also ce is the acceleration image of the link CE. Thus if the points Y and y divide the link CE and the

Digitized by Google

image *ce* in the same ratio, *Ay* is the acceleration of the point *Y*. The acceleration of every point in the mechanism may therefore be found from the acceleration diagram.

140. To draw the acceleration diagram for the Joy gear shown in Figs. 140 and 142, and re-drawn in the configuration corresponding with the crank angle θ, the crank being assumed to rotate with uniform angular velocity, and the path PP being in the position for full forward gear. Assume the linear velocity of the crank pin to be one foot per second.

It is first necessary to draw the velocity diagram. Take any pole *V*, Fig. 168, and draw *Vk* to represent the velocity of the crank pin *K*, Fig. 167. Draw *Vq* parallel to the line of stroke, and draw *kq* at right angles to the connecting rod *KQ*. Then *kq* is a small scale drawing of the rod. Take the point *r* in *kq* so that $kr : rq = KR : RQ$. Then *Vr* represents the velocity of the point *R* in magnitude and direction.

Again, consider the link *RDS*. The velocity of the point *R* is completely known, the direction of the velocity of *S* is known, being tangential to the path of *S*, that is at right angles to the link *FS*. Hence in the velocity diagram, Fig. 168, draw *Vs* at right angles to *FS* and *rs* at right angles to the link *RS*, then *Vrs* is the velocity diagram for the link, *rs* being a small scale drawing of the link. Find the point *d* in it so that $SD : DR = sd : dr$; then *Vd* represents the velocity of the point *D*.

Again, consider the link *DJ*. The velocity of the point *D* is completely known, and the direction of the velocity of the point *J*, which must be tangential to the path *PP*. Therefore in the velocity diagram, Fig. 168, draw *Vj* at right angles to *CJ* and *dj* at right angles to the link *DJ*, then *Vdj* is the velocity diagram for the link *DJ*. Produce *dj* to *v*, taking *v* so that $dj : jv = DJ : JV$. Join *Vv*, then *Vv* represents the velocity of the point *V* of the link *YV*.

Again, considering the valve rod *VY*, the velocity of the point *V* of the link is completely known, and the direction of the velocity of *Y*, hence draw *Vy* in the velocity diagram parallel to the line of stroke of the valve and then draw *vy* at right angles to *VY*, thus fixing the velocity *Vy* of the point *Y* of the link.

Hence, radiating from the point *V* are lines *Vs*, *Vq*, *Vr*, *Vd*, *Vk*, *Vj*, *Vv*, *Vy* representing in magnitude and direction the velocities of the several points in the gear.

The lines *qk*, *rs*, *dv*, *vy* represent the respective velocity images of the links, each image being at right angles to the position occupied by the link whose image it is.

Digitized by Google

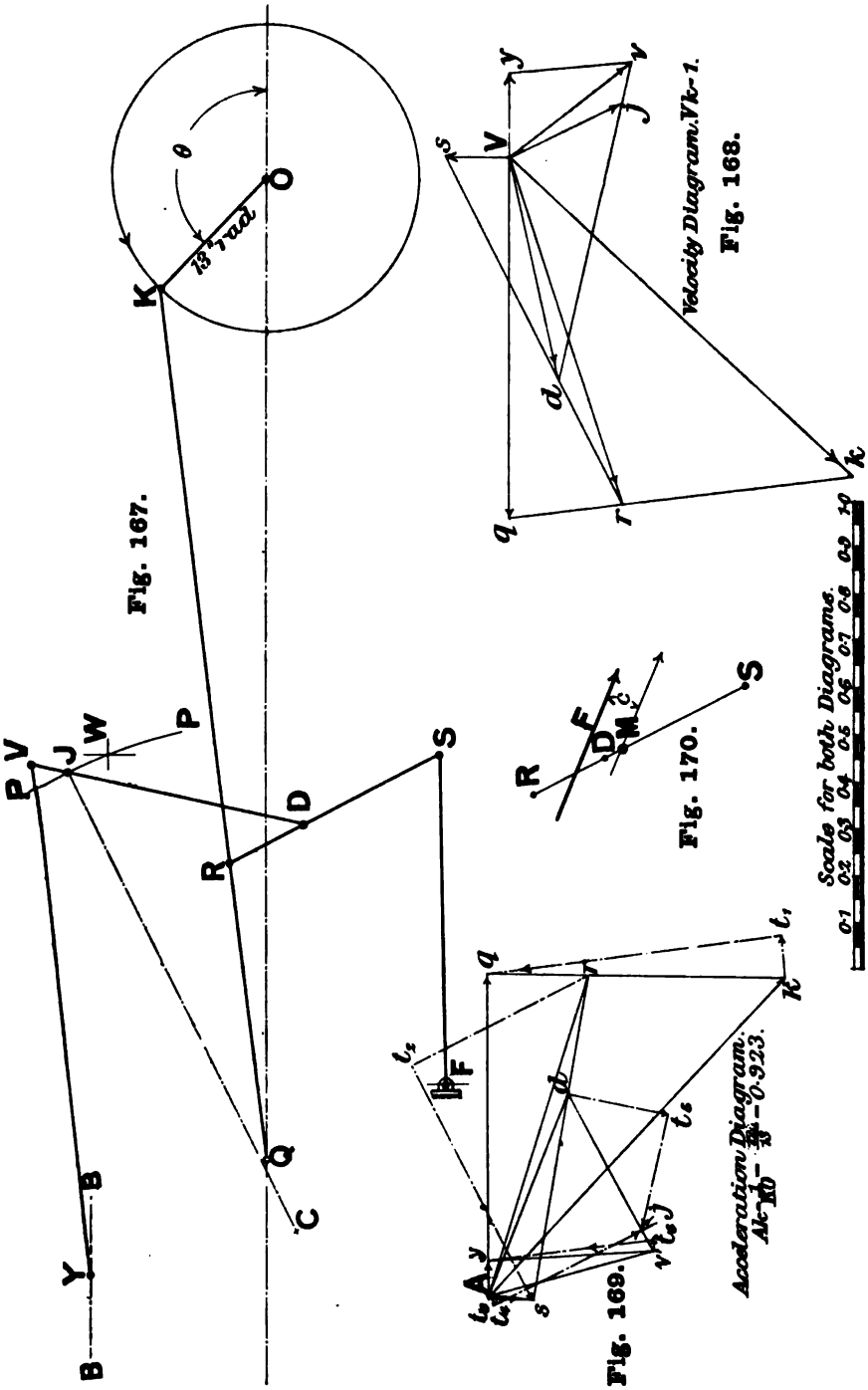

JOY GEAR ILLUSTRATED IN FIGS. 140 AND 142. VELOCITY AND ACCELERATION DIAGRAMS.

Digitized by Google

Immediately the velocity of the crank pin is given, the scale of the line *Vk* is fixed, and the velocities of all the other points may be scaled off. In Fig. 168, the velocity of the crank pin is taken to be one foot per second.

When drawing the diagram, a slide rule is of great assistance in fixing the positions of points on the images corresponding to the position of points on the actual rods. It should be understood that although *qk* is a scale drawing of the rod *QK*, and *rs* is a scale drawing of the rod *RS*, the scales are not the same. Every image has a scale of its own.

During the drawing of the acceleration diagram it will be found that the radial accelerations of the points

Q about *K*,
S about *R*,
S about *F*,
J about *D*,
J about the centre of the path *PP*, that is *C*,
Y about *V*

will be required.

It is convenient to tabulate these quantities in the form shown in Table 11.

TABLE 11.

Radial accelerations. Joy Gear illustrated in Figs. 140 *and* 142.

Data obtained by measurement from the velocity diagram.

The velocity of the crank pin (*Vk* in the diagram Fig. 168) is unity.

The radial acceleration of the crank pin = 1/1·084 = 0·923 ft. per sec. per sec.

Designation of point and axis	Vector on diagram Fig. 168 representing the velocity	Magnitude of velocity measured from diagram	Radius of point. Feet (See Fig. 142)	Radial acceleration. Feet per sec. per sec.
Q about *K*	*kq*	0·735	6·166	0·088
S about *R*	*rs*	0·834	1·66	0·419
S about *F*	*Vs*	0·135	2·33	0·008
J about *D*	*dj*	0·607	1·713	0·215
J about *C*	*Vj*	0·266	3·625	0·019
Y about *V*	*vy*	0·260	3·625	0·018

Digitized by Google

The figures in the third column are obtained by measurement from the velocity diagram.

The radial accelerations in the fifth column are calculated arithmetically.

The work is now a succession of problems.

(*a*) *The acceleration of the crank pin K being given, to find the respective accelerations of the points Q and R.*

(This problem often appears in connection with the steam engine mechanism and there are several particular constructions which may be used for its solution.)

Since the crank pin K, Fig. 167, revolves uniformly with a velocity of 1 foot per second, its acceleration is

$\frac{1}{KO}$, in the direction KO, that is 0·923 ft. per sec. per sec.

Take any origin A, Fig. 169. Select any convenient scale.

Set out Ak, parallel to KO and equal to 0·923;

kt_1, the radial acceleration of Q about K, parallel to QK and equal to 0·088;

t_1q, at right angles to QK, because this is the direction of the tangential acceleration of Q about K.

Again, since the direction of Q's acceleration is in the line of stroke, set out Aq parallel to the line of stroke intersecting the line t_1q in the point q. Aq is the acceleration of the point Q; and the line qk is the acceleration image of the rod QK.

Divide qk in r so that

$$kr : rq = KR : RQ,$$

then Ar is the acceleration of the point R.

(*b*) *The acceleration of R being given, to find the respective accelerations of the points S and D.*

The acceleration of R is already represented in the diagram, Fig. 169, by the vector Ar. To find the acceleration of S:—

Set out rt_2, the radial acceleration of S about R, parallel to SR and equal to 0·419 (see Table 11), and then draw t_2s at right angles to SR, the direction of the tangential acceleration of S about R.

Again, set out At_3, the radial acceleration of S about F, parallel to SF and equal to 0·008 and then draw t_3s at right angles to SF, this being the direction of the tangential acceleration of S about F. The intersection at s then fixes the tangential accelerations of S about R, and of S about F. The acceleration of the point S

Digitized by Google

is then represented by As, and rs is the acceleration image of the rod.

Divide rs in d so that

$$sd : dr = SD : DR,$$

then Ad is the acceleration of the point D.

(c) *The acceleration of the point D being given, find the respective accelerations of the points J and V.*

The acceleration of the point D is already represented by the line Ad on the diagram. Therefore, set out dt_5, the radial acceleration of J about D, parallel to JD and equal to 0·215 (see Table 11), and draw t_5j at right angles to JD.

Again, set out At_4, the radial acceleration of J in the curved path PP of which C is the centre, parallel to JC and equal to 0·019, and draw t_4j at right angles to CJ, thus defining the point j. The acceleration of the point J is then represented by Aj, and dj is the image of the rod.

Divide the image externally in v so that

$$dj : jv = DJ : JV,$$

then Av is the acceleration of the point V.

(d) *Given the acceleration of the point V, find the acceleration of the point Y.*

The acceleration of the point V is represented by Av in the diagram. Therefore set out vt_6, the radial acceleration of Y about V parallel to YV and equal to 0·018, and draw t_6y at right angles to YV.

Again, the direction of Y's acceleration is along the line of stroke of the valve spindle BB. Therefore draw Ay parallel to BB, thus defining the point y.

The acceleration of the point Y is then represented by Ay.

These four problems complete the drawing of the acceleration diagram. From the diagram the acceleration of every point in the gear may be obtained.

The full lines form the acceleration images of the corresponding links of the gear.

In order to fix the scale of the acceleration diagram to correspond with a given crank pin velocity it is only necessary to remember that whatever this velocity may be, v say, the line Ak in the acceleration diagram represents the acceleration $\frac{v^2}{KO}$. Also if the velocity of the

Digitized by Google

crank pin is variable, the vector Ak does not represent the whole acceleration of the crank pin; there is a tangential component to be added, in which case the acceleration of K is not in the direction KO. Whatever it is however, it must be given completely before the diagram can be constructed.

141. To find the angular acceleration of a link from the acceleration diagram. The angular acceleration of a link is found by dividing the tangential acceleration of any point on the link with regard to any other point on the link by the distance between the points.

The tangential acceleration is found, when the two points are specified, by locating these points on the acceleration image of the link and then drawing through them, lines respectively perpendicular and parallel to the actual link. It is of course most convenient to use the end centres of the links for this purpose. The line at right angles to the actual link represents the tangential acceleration; and the line parallel to the actual link represents the radial acceleration.

Thus in Fig. 169 the tangential acceleration of the point S about the point R, is represented by the vector t_2s. Hence the angular acceleration of the link RS is

$$\frac{t_2s}{RS} \text{ radians per sec. per sec.}$$

The sense of this acceleration is found by observing which way the tangential acceleration acts with regard to the centre about which it is computed. Thus in the link RS, t_2s acts on the point S of the link diagram, Fig. 167, in such a direction that it tends to turn the link RS about the centre R in the clockwise or negative direction.

Applying this method to the diagrams Figs. 167 and 169 it will be found that the tangential acceleration of

Q about K is 0·635 and is negative,
S about R is 0·54 and is negative,
S about F is 0·063 and is negative,
J about D is 0·23 and is positive,
Y about V is 0·36 and is negative.

Dividing these figures by the respective lengths of the links, the angular acceleration of each link is found, corresponding to a crank pin velocity of 1 foot per second. In the case where the crank pin velocity is changed to 30 feet per second say, these numbers must be multiplied by $30^2 = 900$ to find the corresponding accelerations. This is further exemplified in Article 144.

Digitized by Google

142. Dynamical principles from which the accelerating forces acting on the links may be found when the accelerations are known. The forces causing the acceleration of any link having plane motion may be analysed into:—

(1) A force, acting at the mass centre of the link, in the direction of the acceleration of the mass centre, whose magnitude is equal to the product of the mass of the link and the acceleration of the mass centre.

Thus if a is the acceleration of the mass centre, M the mass of the link, F the accelerating force,

$$F = M \times a = \frac{W}{g} \times a \quad \text{.....(1).}$$

(2) A couple acting on the link, in the plane of motion, whose magnitude is equal to the product of the moment of inertia of the link, I, about an axis through the mass centre perpendicular to the plane of motion and the angular acceleration of the link.

Thus if z is the angular acceleration of the link, L the couple producing this acceleration,

$$L = Iz = Mk^2z = \frac{W}{g}k^2z \quad \text{.....(2).}$$

Having computed the force F from equation (1) and the couple L from equation (2), the two may be combined into one force by moving F parallel to itself through a distance c in the plane of motion, from the mass centre, c being found from

$$Fc = L.$$

That is, c is given by

$$c = \frac{L}{F} = \frac{k^2z}{a} \quad \text{.....(3).}$$

Thus the magnitude and the position of the single force is found which is able to produce the given instantaneous acceleration of the link.

For example, let the link RS, Fig. 170, be supposed isolated from the Joy gear, and suppose that when it formed part of the gear the acceleration of the mass centre was found to be 378 ft. per sec. per sec., and its angular acceleration about the mass centre, 301 radians per sec. per sec. in the negative direction. Further suppose its weight to be 35 pounds and its moment of inertia about the mass centre to be 0·32. Then the magnitude of the force producing the instantaneous acceleration is from (1)

$$F = \frac{35}{32{\cdot}2} \times 378 = 412 \text{ lbs.}$$

Digitized by Google

And the couple producing the angular acceleration,

$$L = 0{\cdot}32 \times 301 = 96{\cdot}4 \text{ foot lbs.}$$

The force cF must now be moved parallel to itself through a distance

$$c = L/F = 96{\cdot}4/412 = 0{\cdot}242 \text{ foot,}$$

so that its moment with regard to the mass centre is negative.

This accelerating force is brought on to the link by forces acting through the joints at the ends. The accelerating force F may therefore be looked upon as the resultant of these two end forces. The link is therefore held in instantaneous equilibrium by the two forces at the ends and the accelerating force F, **reversed in direction.** The problem of finding the end forces thus becomes one of pure statics.

143. To find the moment of inertia of a link of a mechanism about an axis, through its mass centre, perpendicular to the plane in which the link moves. The method depends upon the principle that any rod or link is dynamically equivalent to two particles, m_1, m_2, concentrated at two points, distant d_1 and d_2 respectively from the mass centre, as indicated in Fig. 171, these distances being connected

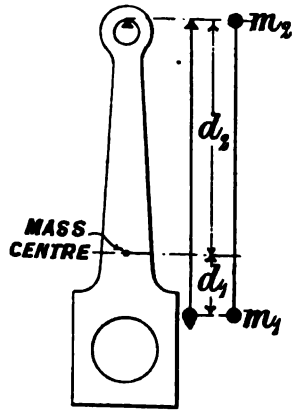

Fig. 171. SWINGING A PLUMB-BOB AND A LINK IN UNISON TO FIND k^2.

with the radius of gyration of the rod, k, about the mass centre, by the relation

$$d_1 d_2 = k^2.$$

This relation is easily established from the conditions, that if the two particles are dynamically equivalent to the link:—

(1) The sum of their masses must be equal to the mass of the link.

(2) The centre of gravity of the particles must coincide with the centre of gravity of the link they represent.

Digitized by Google

(3) The moment of inertia of the particles about an axis, through the mass centre, perpendicular to the plane of motion of the link must be equal to the moment of inertia of the link about the same axis.

Expressed algebraically these conditions are, M being the mass of the link and m_1 and m_2 the respective masses of the particles,

$$m_1 + m_2 = M \quad \text{.....(1)},$$

$$m_1 d_1 - m_2 d_2 = 0 \quad \text{.....(2)},$$

$$m_1 d_1^2 + m_2 d_2^2 = M k^2 \quad \text{.....(3)}.$$

Substituting the value of M from (1) and m_2 found from (2) in (3) the above relation will be obtained.

Also, substituting the value of m_2 from (2) in (3),

$$m_1 = \frac{M d_2}{d_1 + d_2} \quad \text{.....(4)},$$

and similarly

$$m_2 = \frac{M d_1}{d_1 + d_2} \quad \text{.....(5)}.$$

There is no restriction on the choice of the quantities d_1 and d_2 so that there are an infinite number of two particle systems which are dynamically equivalent to the actual link. When either d_1 or d_2 is fixed, a particular two particle system is fixed. If the equivalent two particle system, the particles being supposed connected by a rod without mass, be allowed to oscillate about an axis through one particle, parallel to the given axis through the mass centre, the distance $(d_1 + d_2)$ to the other particle is the length of the equivalent simple pendulum. The determination of the length of an equivalent simple pendulum therefore for the actual link determines a distance $(d_1 + d_2)$, and the determination of the position of the mass centre of the link fixes the distance d_1 supposing the axis about which oscillation takes place is at d_1.

The way to find an equivalent simple pendulum for the actual link is to suspend the link complete in every particular from some convenient axis. A knife edge passed through the journal at one end is usually an easy way of doing this. Then suspend a plumb line from the knife edge also, as indicated in Fig. 171, and adjust its length until it swings in unison with the rod. If l is the length of this plumb line, and d_1 is the distance of the mass centre of the link (found by balancing the link on a knife edge), from the axis of suspension,

$$d_2 = l - d_1.$$

Hence

$$k^2 = d_1 (l - d_1) = d_1 d_2,$$

and the value of k can be computed. If W is the weight of the link,

Digitized by Google

its moment of inertia about an axis, through the mass centre, parallel to the axis of suspension is

$$\frac{W}{g} \times k^2.$$

Mr Aspinall has had each of the links of the Joy gear illustrated in Figs. 140 and 142 dealt with in this manner and the results of these experiments are shown in Table 12. Considering a particular case, the link RS of the gear, Fig. 140, was suspended on a knife edge passed through the journal R. The plumb line which oscillated in unison with it was 14 inches long. By balancing on a knife edge the distance of the mass centre from the knife edge was found to be $8\frac{1}{2}$ inches. Hence

$$d_1 = 8\tfrac{1}{2}'' = 0{\cdot}792 \text{ foot},$$
$$d_2 = 1{\cdot}166 - 0{\cdot}792 \text{ foot} = 0{\cdot}374 \text{ foot},$$
$$k^2 = 0{\cdot}792 \times 0{\cdot}374 = 0{\cdot}296.$$

The weight of the link is 35 lbs. Hence its moment of inertia about an axis, through its mass centre, perpendicular to the plane in which it moves is

$$\frac{35}{32{\cdot}2} \times 0{\cdot}296 = 0{\cdot}32\,\frac{W}{g} \text{ foot}^2 \text{ units}.$$

Notice that all the dimensions must be expressed in feet.

The way is now clear for the complete solution of the following problem.

144. Find the accelerating forces in magnitude and position for the links of the Joy gear, Fig. 140, when the crank pin has a velocity of 30 feet per second, and the crank angle has the value θ degrees. The given velocity corresponds with a speed of 68 miles per hour for the engine in question, the wheels being 7′ 3″ in diameter and the stroke, 26 inches.

Let Fig. 167 represent the configuration of the gear, then Fig. 168 and Fig. 169 are respectively the velocity and acceleration diagrams. The scale attached to them is however drawn for a crank pin velocity of 1 foot per second.

With the present data,

Vk, Fig. 168, now represents 30 feet per second,

Ak, Fig. 169, represents $30^2/1{\cdot}083 = 830{\cdot}7$ feet per sec. per sec.

The centre lines of the gear in the configuration determined by the crank angle θ, and the parts of the acceleration diagram required for the present problem are re-drawn in Fig. 172 and the proper scale is attached to it. Any line however in the diagram, Fig. 169, measured

Digitized by Google

on the scale attached to it multiplied by 900 will give the length measured on the new scale of the diagram, Fig. 173.

The work is to be carried out in the following way; full instructions being given for the sake of completeness.

(*a*) Draw the gear in the configuration corresponding to the given crank angle θ.

(*b*) Draw the velocity diagram as in Fig. 168.

(*c*) Compute from this the radial acceleration of the various points scheduled in Table 11.

(*d*) Draw the acceleration diagram as in Fig. 173.

(*e*) Weigh each link and enter the weights as in line 2, Table 12.

(*f*) Calculate the masses corresponding to the weights, line 3.

(*g*) Mark on the drawing of the gear, Fig. 172, the respective positions of the mass centres of the links M_1, M_2, M_3, M_4, M_5.

(*h*) Find the corresponding points m_1, m_2, m_3, m_4, m_5 in the corresponding acceleration images, *qk*, *rs*, *dv*, *vy*, *As*, Fig. 173.

(*i*) Measure off the accelerations of the points m_1, etc., and enter the results in line 5, Table 12.

(*j*) Multiply together corresponding numbers in lines 6 and 3 of Table 12, obtaining thereby the several forces competent to cause the instantaneous accelerations of the respective mass centres of the links.

These forces have to be moved parallel to themselves a distance *c* such that in the new positions their moments about the respective mass centres can produce the instantaneous angular accelerations of the links of the gear. Hence the next part of the work is directed to the finding of *c*.

(*k*) Adjust a plumb line to swing in unison with each link, suspended in succession from a knife edge through one journal. Enter the plumb line lengths in line 7 of the table.

(*l*) Enter in line 8 of the table the distance of the mass centres of the several links from the axes about which they were suspended. This is the dimension d_1.

(*m*) Subtract the numbers of line 8 from the corresponding numbers in line 7, finding thus d_2, line 9.

(*n*) Compute the several values of $d_1 d_2 = k^2$, line 10.

Digitized by Google

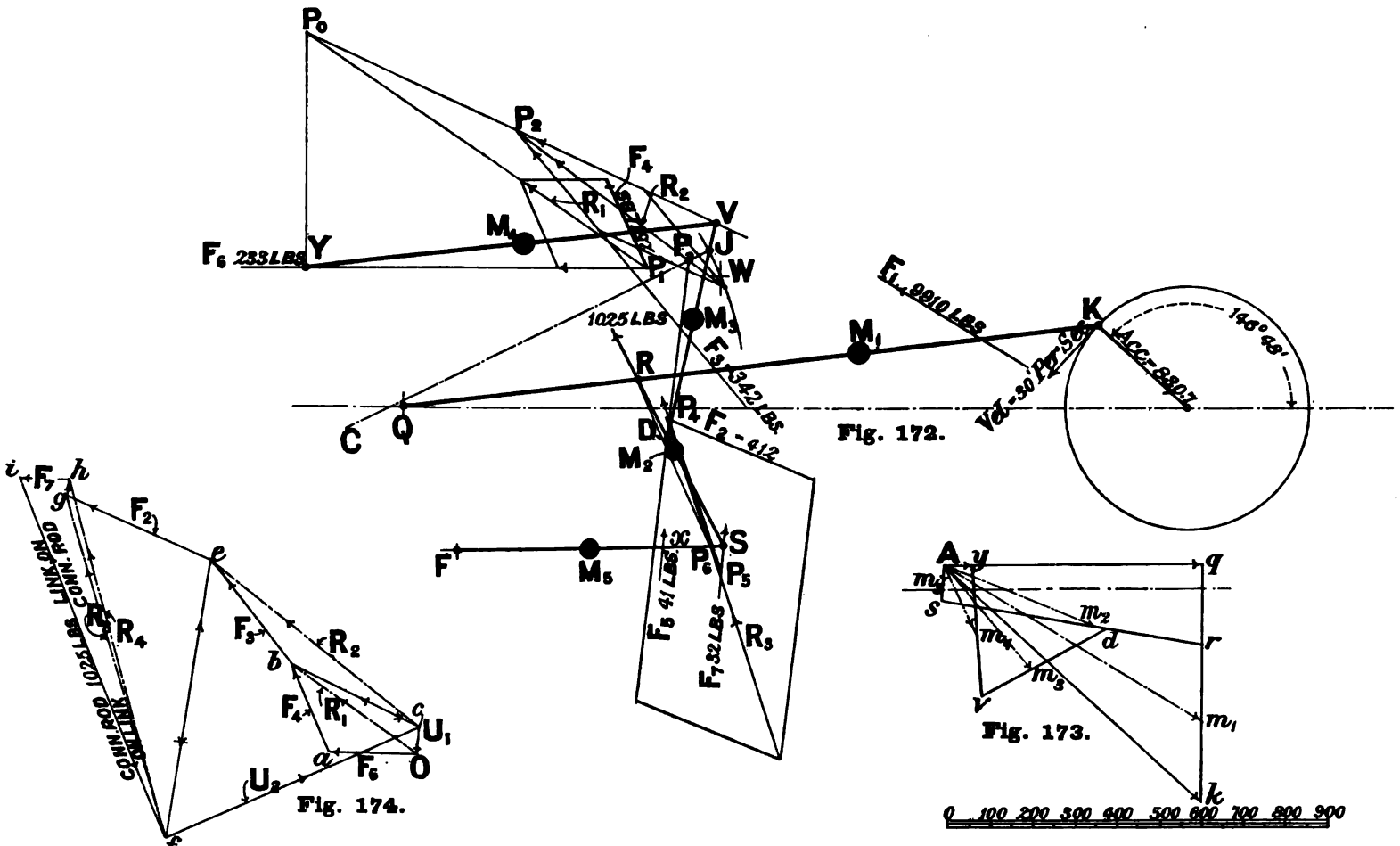

JOY GEAR ILLUSTRATED IN FIGS. 140 AND 142. INERTIA FORCE ON THE CONNECTING ROD DUE TO THE VALVE GEAR WHEN THE SPEED IS 68 MILES PER HOUR.

Digitized by Google

(*o*) The next step is to find the tangential acceleration z. The points whose tangential accelerations are required are entered in line 12, and the actual values of the tangential accelerations are placed under them. These accelerations are measured from Fig. 169, the lengths to the scale of that figure being multiplied by 900. The lines in the figure representing these tangential accelerations are, taking them in the order of the table,

$$t_1q \qquad t_2s \qquad t_3j \qquad t_6y \qquad t_4s.$$

(*p*) The sign of the tangential acceleration of each link is entered in line 13. This is determined by observing whether the tangential acceleration with regard to the axis specified in line 12 is in the counter-clockwise or clockwise direction. Thus, the acceleration t_2s with regard to the centre r is clockwise, that is, negative.

(*q*) Enter the respective lengths of the links measured between the points KQ, RS, DJ, VY and FS, in line 14.

(*r*) Divide the tangential accelerations in line 12 by the corresponding lengths in line 14, the quotients are the corresponding angular accelerations of the several links and these are entered in line 15.

(*s*) Though not necessary for the problem in hand, the magnitudes of the couples necessary to produce the instantaneous accelerations given in line 15 are computed by multiplying corresponding figures in lines 15 and 10 and 3. The products are entered in line 16.

(*t*) Compute the respective values of $\frac{k^2z}{a} = c$, from the numbers in lines 10, 15 and 5. These are entered in line 17.

(*u*) Through the mass centre of each link M_1, M_2, etc., in Fig. 172, draw lines respectively parallel to Am_1, Am_2, etc. in the acceleration diagram, Fig. 173, and then parallel to these lines through M_1, M_2, etc. draw forces F_1, F_2, etc. at the respective distances c_1, c_2, etc. given in line 17, placing each force to that side of the mass centre which enables it to produce a rotation of the sense given in line 13, supposing the link to turn about an axis through its centre of mass. All the forces are shown reversed in direction in Fig. 172 for reasons given in Article 142.

Thus the problem is completely solved.

Digitized by Google

TABLE 12.

Joy Gear. Lancashire and Yorkshire Railway.

Velocity of crank pin, 30 feet per second, corresponding to a speed of 68 miles per hour with 7′ 3″ driving wheels and 26″ stroke.

1. Designation of link	QK	SR	DV	VY	FS	Valve
2. Weight W lbs.	446	35	34	45·25	31·5	111
3. Mass $= \frac{W}{g}$	13·85	1·087	1·055	1·405	0·98	3·45
4. Point on diagram, Fig. 173, whose acceleration is to be measured	m_1	m_2	m_3	m_4	m_5	
5. Acceleration $= a$. Feet per sec. per sec.	715	378	324	183	42·3	67·5
6. Force, $F = \frac{W}{g} a$, lbs.	F_1 9910	F_2 412	F_3 342	F_4 257	F_5 41·4	F_6 233
7. Length of plumb line. Feet	5·42 from Q	1·166 from R	1·558 from D	2·785 from V	1·885 from E	
8. Distance of c. of gravity of link from axis $= d_1$. Feet	4·18	0·792	1·166	1·777	1·250	
9. d_2	1·24	0·374	0·392	1·008	0·635	
10. $d_1 d_2 = k^2$	5·18	0·296	0·457	1·794	0·794	
11. I about mass centre	71·8	0·32	0·482	2·52	0·777	
12. Tangential acceleration 900 times the values in Fig. 169. Feet per sec. per sec.	Q about K 565	S about R 501	J about D 227	Y about V 315	S about F 85·5	
13. Sign of tangential acceleration	−	−	+	−	−	
14. Length of link. Feet	6·166	1·66	1·713	3·625	2·33	
15. Angular acceleration in radians per sec. per sec. $= z$	91·8	301	132·5	87	36·7	
16. Magnitude of couple, L, in foot lbs.	L_1 6600	L_2 96·4	L_3 63·8	L_4 219	L_5 28·5	
17. Distance, $c = \frac{k^2 z}{a}$ or $\frac{L}{F}$. Feet	0·665	0·242	0·167	0·89	0·636	

Digitized by Google

145. Bennett's construction for finding a point in the line of action of the force producing the instantaneous acceleration of a link, when the directions of the accelerations of two points of the link are respectively given. The work of the preceding article may be shortened by using the following theorem which was given to the author by Mr G. T. Bennett of Emmanuel College, Cambridge.

Theorem. If a rigid link, *RS*, Fig. 175, have plane motion, and the direction of the acceleration of two points in the link be given, as

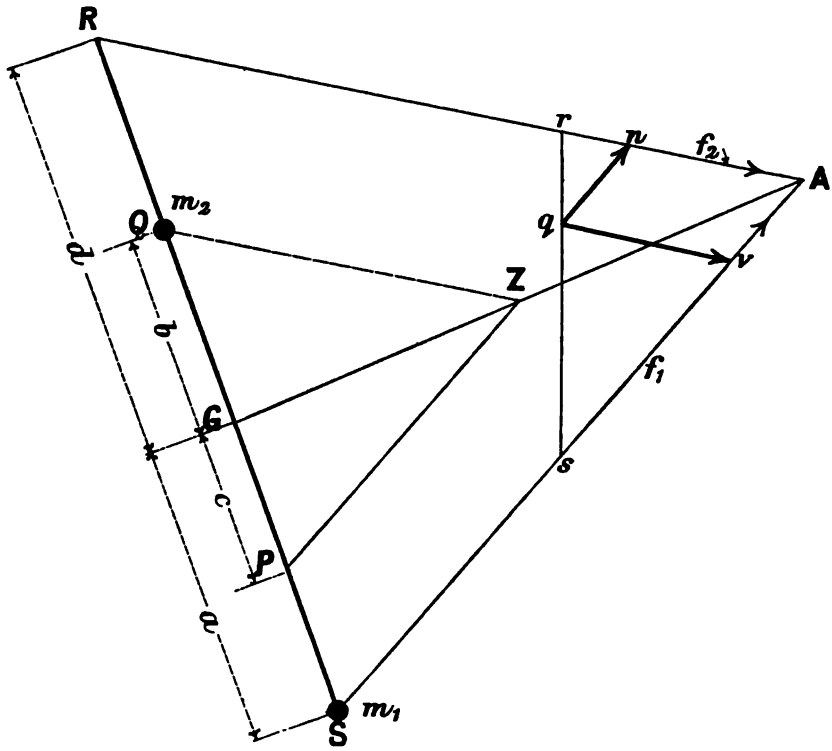

Fig. 175. Bennett's Construction for finding *Z*, a point in the line of Action of the resultant accelerating Force.

R and *S*, then, if *G* is the mass centre of the link, and *P* is the centre of oscillation with respect to *R*, the force which produces the instantaneous acceleration of the link passes through a point *Z* found as follows:—

Produce the given directions of acceleration to meet in *A* and join *GA*. Through *P* draw a parallel to *SA* cutting the line *GA* in *Z*. Then *Z* is the point required.

Digitized by Google

Proof. Let k^2 be the radius of gyration of the given link about an axis through its mass centre at right angles to the plane of motion. And let the directions of the accelerations of the two points R and S be given respectively by RA and SA. Let the mass M, of the link, be supposed concentrated into a system of two particles, one of which, m_1, is placed at S. Then it has been shown in Art. 143, that if the two particles are to form an equivalent dynamical system, the second particle, m_2, must be placed at a point Q, whose distance from G, represented by b, is found from the relation

$$ab = k^2,$$

where a is the distance SG.

Also the magnitude of m_1 is

$$\frac{bM}{a+b} \quad \text{.....(1)},$$

and the magnitude of m_2 is

$$\frac{aM}{a+b} \quad \text{.....(2)}.$$

Again, let R, P be two other points at which the mass M might be concentrated into an equivalent two particle system, R being one of the points whose direction of acceleration is given. Then if $PG = c$ and $GR = d$

$$cd = k^2.$$

Therefore $$ab = cd,$$

from which $$\frac{c}{a} = \frac{b+c}{a+d} \quad \text{.....(3)}.$$

Assume for the moment that the magnitudes of the accelerations of the points R and S are known, and let them be respectively represented by f_2 and f_1. Then, if $rA = f_2$ and $sA = f_1$, rs is the acceleration image of the link. Let q in the image, correspond with Q in the link. Then qA is the acceleration of the point Q. This can be resolved into two components, qn and qv, respectively parallel to the directions of the accelerations, SA and RA. From this it will be seen that whatever be the actual magnitude of the acceleration f_1, the magnitude of the component qn, parallel to it, is such that

$$qn : sA = rq : rs = (d-b) : (a+d),$$

so that $$qn = \frac{f_1(d-b)}{(a+d)} \quad \text{.....(4)}.$$

Refer these component accelerations to the particle at Q and it will be

Digitized by Google

seen that the accelerating force acting on the link is the resultant of three component forces, namely,

$m_1 f_1$ acting at S in the direction sA,

$m_2 \overline{qn}$ acting at Q in a direction parallel to sA,

$m_2 \overline{qv}$ acting at Q in a direction parallel to rA.

The next step is to find the position of the resultant of the two parallel forces of this group by taking moments about the point Q. If x is the distance from Q at which this resultant force cuts the link RS,

$$x = \frac{m_1 f_1 (a+b)}{m_1 f_1 + m_2 \overline{qn}} \quad \text{.....(5).}$$

Substituting the respective values of m_1 and m_2 from equations (1) and (2), and the value of $\overline{qn}$ from equation (4), the expression reduces to

$$x = \frac{b}{d}(a+d),$$

and introducing the value of the ratio b/d from equation (4) this becomes finally

$$x = b + c = QP.$$

That is to say, the resultant of the two parallel forces passes through the point P, which is the centre of oscillation of the link with respect to R. If then, this resultant be produced to cut the direction of the remaining component force through Q in Z, Z is a point in the line of action of the force producing the instantaneous acceleration of the link.

Again, since $$ab = cd,$$

$$a : d = c : b.$$

Therefore the points G, Z and A lie on a straight line. Hence Z may equally well be found by joining G to A and drawing PZ, parallel to SA, as stated above*.

It follows that Z may just as well be found by drawing QZ parallel to RA to cut GA in Z; so that either of the two centres of oscillation Q or P may be used in the construction as may be found convenient.

This Theorem may now be applied to find the position of the accelerating force for each link of the Joy gear. It will be sufficient to exemplify the method by using it to find the point through which the

* This Theorem is also true if the sense of the acceleration of one of the points be reversed. For instance, if whilst the sense of the acceleration of R remains RA, that of S is changed to AS, Z is still a point in the line of action of the resultant.

Digitized by Google

accelerating force which acts on the link *RS* passes. For this purpose the link *RS* of Fig. 172, has been re-drawn in Fig. 176. With this method it is only necessary to fill in the first ten lines of Table 12.

Having drawn the acceleration diagram (not shown in the figure, but supposed to be drawn in a position near it) draw through the points *R* and *S*, lines respectively parallel to the directions of acceleration *As*, *Ar*, given by the acceleration diagram, Fig. 173. Mark the position of the mass centre *G* on the link. Next mark off the point *P* so that

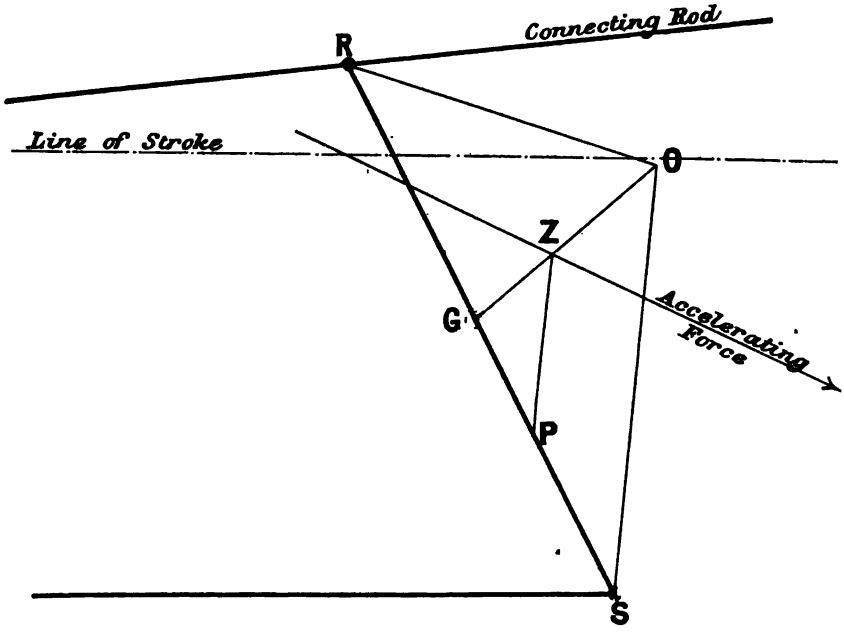

Fig. 176. Construction for finding the Position of the Resultant Accelerating Force in the case of the link *RS*, of the Joy Gear, Fig. 172.

the distance *RP* is equal to the length of the plumb line which was found to swing in unison with the link. In the present example the distance *RG* is 0·79 foot, and the distance *RP* 1·166 feet. Through *P* draw *PZ* parallel to the line *SO*, cutting *GO* in *Z*. Then the accelerating force must pass through *Z*.

The direction of the accelerating force is given by the line Am_2 in the acceleration diagram, Fig. 173, and its magnitude is given in the sixth line of Table 12. Hence the force producing the instantaneous acceleration of the link is known completely, in magnitude, direction and position.

When all these instantaneous accelerating forces have been marked

Digitized by Google

on the drawing, the problem becomes a statical one and the continuation of the general solution is given in the next article.

146. Find the force which must act at R to balance the accelerating forces found in Art. 144. The method of solution is to consider each link in order, beginning with YV, reverse each accelerating force F in direction, find the resultant of all the forces acting on the link, and then apply the principles of Article 134. To the system of forces $F_1 \ldots F_5$ must be added the force F_6, representing the force necessary to overcome the acceleration of the slide valve and valve spindle supposed concentrated at the point Y. The necessary numbers are given in the last column of Table 12.

To F_6 may be added the additional force required to overcome the friction of the slide valve. In the present case, however, this is considered to be zero because the object is to show the force at R due to acceleration alone.

1. Consider the equilibrium of the link YV, Fig. 172. The forces acting on the link are F_6 and F_4, known completely, and U_1 the vertical reaction at the guide of the joint Y, known in direction only, and the force through the joint V altogether unknown in direction and magnitude. Find the resultant, R_1, of F_6 and F_4, and produce it to cut a perpendicular to the line of stroke through Y in P_0. Join P_0V, fixing thereby the direction of the force at V. In Fig. 174 set out $Oa = F_6$, $ab = F_4$, and draw through b and O parallels respectively to P_0Y and P_0V in Fig. 172, thus fixing the point c. Then

cO is the reaction at Y,
bc is the reaction at the joint V.

The system of forces, F_4, F_6, U_1, and bc then hold the link YV in equilibrium.

2. Consider the equilibrium of the link VJD. The link is kept in equilibrium by the reaction at the joint V, that is cb (notice the reversal of the sign here), the force F_3, the reaction U_2 at J, and the reaction at the joint D. Of these forces the first two are completely known. Find the resultant R_2 of the forces F_3 and cb. The directions of these two latter forces meet in P_3. Then this resultant, the force at D, and the reaction at J, must meet in a point. Produce R_2 to meet the direction of the reaction at P_3, which is normal to the path of J, and join P_3D, thus fixing the direction of the reaction at D. In Fig. 174 draw be equal to F_3,

Digitized by Google

and through e and c draw parallels respectively to the lines P_3D and P_3J in Fig. 172, meeting in f. Then ef is the force at the joint D, and fc is the reaction at J, called U_2.

3. Again, consider the equilibrium of link RS. It is kept in equilibrium by the forces fe acting at D, F_2, and a force F_7 acting at S parallel to F_5 and equivalent to 32 lbs. (F_5 multiplied by the fraction Fx/FS), the reaction at the joint R, and the reaction at S, which must be along the line SF. The resultant of the three forces fe, F_2, and F_7 is R_4, whose line of action cuts the direction of the reaction of the joint S in P_6. Join P_6 to the joint R, fixing thereby the direction of the reaction of the joint R. In Fig. 174 set out eg to represent F_2, gh to represent F_7 and then through h and F draw lines parallel respectively to P_6S and P_6R in Fig. 172, thus fixing the point i. Then if is the force at R whose magnitude is to be found. Its magnitude, measured from the diagram, is 1025 lbs.

So that at 68 miles per hour with the motion in full forward gear, at the instant the crank angle passes through the angle θ a force of 1025 lbs. acts on the rod at the joint R to accelerate the motion of the links of the valve gear alone.

At this speed it is very improbable that the motion would be in full forward gear, but the engine would be linked up so that the path PP would be nearer the mid vertical position. This point does not make a material difference to the problem, and it has been worked out in full forward gear in order to take extreme conditions.

To find the maximum value of this force at R it would be necessary to work out its value for a series of values of the crank angle. Practically the maximum value of the force is unimportant compared with a knowledge of its value when the connecting rod is in the position where its inertia loading due to its own mass is a maximum. Because, whatever this maximum loading may be, the force at R must then be added to it. The inertia loading of the connecting rod may be considered to reach its most dangerous point when the rod is at right angles to the crank, because then the direction of acceleration of each particle of the mass of the rod is approximately at right angles to the rod, and it becomes loaded transversely and has to sustain bending stresses. When the rod is at right angles to the crank the value of the force at R works out to 835 lbs. in a direction almost at right angles to the rod. This was determined in the manner set forth in the previous articles.

147. To find the maximum bending moment on the connecting rod, Figs. 140 and 172, due to its own inertia and to

Digitized by Google

the inertia of the valve gear when the crank and the rod are at right angles and the speed is 68 miles per hour. It will be found that when the crank is in the position where it is at right angles to the connecting rod, the radial acceleration of Q about K is negligible. The direction of the tangential acceleration of Q about K therefore practically coincides with the vector representing the acceleration of K, the crank pin. The velocity image is therefore a vector Ak at right angles to the rod. Hence the acceleration of K at right angles to the rod is a maximum and equal to $\omega^2 r$: the acceleration of Q is practically zero and the acceleration of every other point along the rod is proportional to its distance from Q. In any other position of the rod the component acceleration at right angles to the rod results in a bending moment curve having a smaller maximum value, than in the case assumed.

To find the inertia loading of the rod the force required for the acceleration of the motion of each particle of the rod should strictly be estimated, but to make such an estimation is impossible unless the weight of the rod per foot follows a definite law, in which case the equation of the bending moment curve may be found easily enough. In practice the weight per foot of a connecting rod is quite arbitrary. For practical purposes, however, it is quite sufficiently accurate to consider the rod made up of a series of elements, and then to suppose that the mass of each element is concentrated at its mass centre. Then the acceleration of the mass centre of each division is to be found, and then the force which must act to cause the acceleration of the division is the product of its mass and the acceleration of its mass centre.

It should be understood that the accelerating forces are brought on to the rod by the two forces acting at the crank pin and the slide bar, so that for drawing the bending moment curve the rod is to be thought of as a beam, supported freely on two supports a distance apart equal to the length of the rod, measured from the centre of the small end to the centre of the big end, and carrying a system of concentrated loads, each load being the force required to accelerate the motion of a particular division of the rod, reversed in direction.

The method is illustrated in Figs. 177 to 179. First a curve is to be plotted, c, c, c, c, whose ordinates represent the weight of the rod per inch, and whose base is the length of the rod. The curve plotted represents the weight of the Lancashire and Yorkshire rod used with the Joy gear under discussion with sufficient accuracy for the purpose in hand. The projection below the line on the right side of the diagram represents the flanges of the big end brasses. It is more convenient to add their weight this way than to add the weight to the upper side of

Digitized by Google

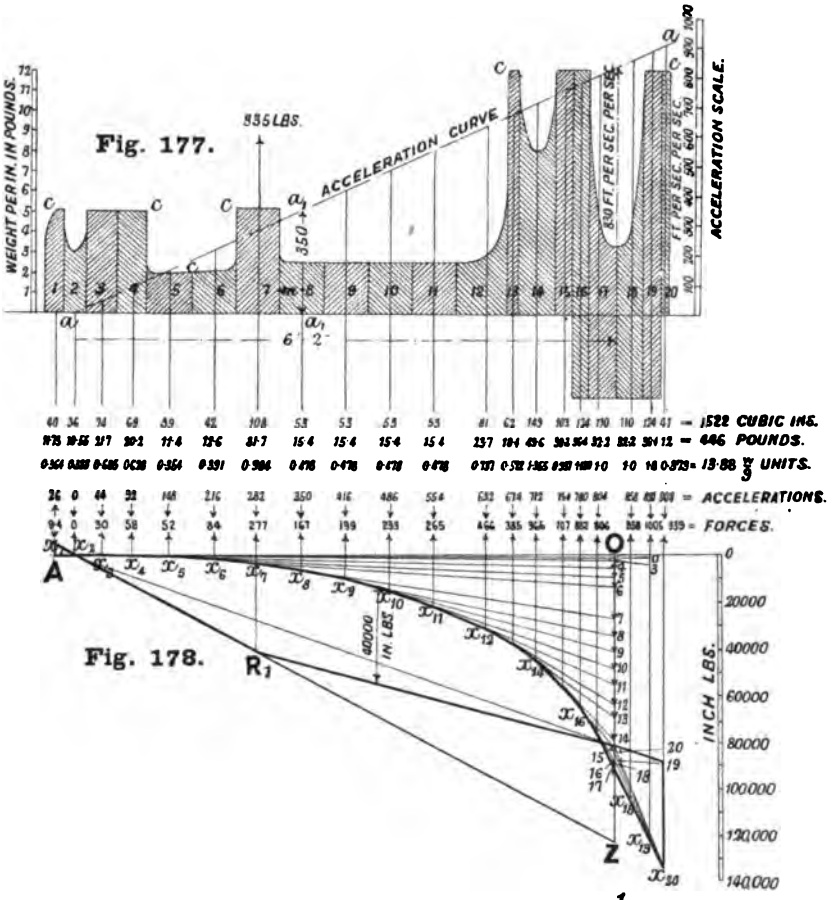

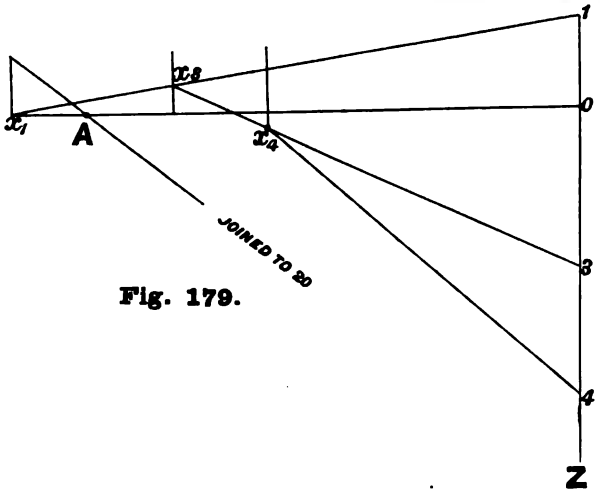

Fig. 179.

JOY GEAR ILLUSTRATED IN FIGS. 140 AND 172. BENDING MOMENT DIAGRAM FOR THE CONNECTING ROD CORRESPONDING WITH A SPEED OF 68 MILES PER HOUR.

Digitized by Google

the curve. The weight per foot here is of course the full vertical width of the diagram.

Next divide the diagram into a series of short divisions, numbered 1 to 20, not necessarily equal in length, but chosen so that the respective mass centres can easily be marked off. Then calculate the weight of each division and find its mass centre. Set out the acceleration curve a, a_1, a for the position where the crank and the rod are at right angles. As just explained, the acceleration is practically zero at the small end, and at other points it is proportional to the distance from the small end, and is $\omega^2 r$ at the crank pin. For 68 miles per hour with 7′ 3″ driving wheels and 13 inch stroke the acceleration of the crank pin is, as already found in the previous diagrams, 830 feet per sec. per sec. Hence the acceleration may be represented by a straight line passing through the small end centre, and having such an inclination to the base line that the ordinate at the big end represents 830 on some conveniently chosen scale. Then from this curve, scale off the acceleration of the mass centre of each division and multiply by the mass of the division. For example, the weight of division 8 is 15·4 pounds. The point m represents the mass centre of the division. The ordinate to the acceleration curve passing through m, namely a_1, a_1, measures its acceleration and scales 350 feet per sec. per sec. The force required for the acceleration of this division is therefore

$$F = 350 \times \frac{15{\cdot}4}{32{\cdot}2} = 167 \text{ lbs.}$$

In the figure the forces corresponding to each division are written under the line passing through the mass centre of each division.

In order to check the accuracy of the work, the resultant of all these forces may be found by taking moments about the big end centre as indicated in Table 13, and comparing it with the resultant found by the graphical methods already explained. From Table 13 it will be seen that the sum of the moments is 81512 inch lbs., and the resultant force is 7770 lbs. Therefore the resultant of all the forces acts at a distance

$$\frac{81512}{7770} = 10{\cdot}5 \text{ inches from the big end centre.}$$

Neglecting the distribution of the accelerating forces along the rod and finding the single accelerating force by the graphical methods already explained, the total force works out to 7728 lbs. acting at a distance of 10¼ inches from the big end centre. There is therefore a very good agreement between the two results.

The problem now becomes the static one of drawing the bending moment curve corresponding to these forces, reversed in direction, and

Digitized by Google

TABLE 13.

Inertia loading of the Connecting Rod of the Lancashire and Yorkshire locomotive.

Division	Force	Distance from big end centre	Moment about big end centre in inch lbs.
1	− 9·5	76·75	− 721
2	0	74	0
3	30·1	70·25	2113
4	57·8	66·0	3820
5	52·4	61	3170
6	84·5	55	4650
7	277	49	13540
8	167	43	7170
9	199	37	7370
10	233	31	7220
11	265	25	6630
12	466	17·75	8270
13	385	14·25	5480
14	966	11	10626
15	707	7·25	5130
16	882	·5	4410
17	806	2·5	2013
18	858	− 2·5	− 2148
19	1005	− 5	− 5025
20	339	− 6·5	− 2206
	7770·3		+ 91612 − 10100 = 81512

to the force acting on the rod from the valve gear at the joint R. The reversed accelerating forces along the rod, and the force from the valve gear act in the same sense. This may be done in a variety of ways, but the following method is the one which requires least labour.

Take OA, Fig. 178, to represent the length of the rod, centre to centre. Draw a line OZ at right angles to OA. Calculate the moment of each force about O, setting out these moments in order from O beginning with that corresponding to division 1. Those forces to the right of O, corresponding to divisions 18, 19, and 20, have opposite moments about O to the rest and must be set out in the opposite

Digitized by Google

direction along OZ to the moments of the forces on the left of O. The force corresponding to division No. 1 is also to be set out upwards.

Table 13 gives the forces, their distances from O, and the corresponding moments in inch lbs.

Thus,	0—1	upwards represents	721 inch lbs.
	1—3	downwards represents	2113 inch lbs.
	⋮		⋮
	6—7	downwards represents	13540 inch lbs.
	⋮		⋮
	17—18	upwards represents	2148 inch lbs.

finally arriving at point 20.

Now join point 1 on OZ to the point x_1, where the direction of the force corresponding to No. 1 division cuts OA. Join point 3 on the line OZ with point x_3, where the direction of the force 3 cuts the line $1x_1$. Join point 4 on the line OZ with the point x_4, where the direction of the force number 4 cuts the line $3x_3$ and so on. Fig. 178 is too small to show this, and Fig. 179 is drawn to a distorted scale in order to show the points referred to clearly.

Finally, join the point 20 on the line OZ with the point A. Then $A\ x_1 \ldots x_2 \ldots x_3 \ldots x_{20} \ldots 20 \ldots A$ is the bending moment diagram required, and the vertical width of this diagram at any point represents the bending moment at the corresponding section of the rod.

To find the additional effect due to the component of the force R, at right angles to the rod, the magnitude of which is 835 lbs., set out 20—Z downwards on the line OZ to represent the moment of the force about O. This moment is equal to 40915 inch lbs. Join Z to A; produce the line of action of the component at R to cut this line in R_1, and join R_1 to the point 20. Then the triangle $AR_1 20$ is the bending moment on the rod due to the component force at R alone. Consequently the total bending moment at any section due to the acceleration of the rod and the valve gear is given by the vertical width of the diagram shown by thickened lines.

It will be found by measurement that the maximum bending moment on the rod is about 40,000 inch lbs., but that the section at which the maximum occurs is not well defined. All the sections between x_8 and x_{10} have to resist a bending moment of about this value.

The design of the rod is admirably suited to meet this condition because it is of uniform section through the divisions 8 to 11, being $1\frac{3}{4}$ inches wide and 5 inches deep.

Digitized by Google

The maximum stress, f, at any specified section of the rod can now be found from the relation

$$M = Zf,$$

where M is the bending moment measured from the curve just found, at a position where the modulus of the section is Z.

At the section x_{10}, where the bending moment is a maximum, the value of Z is

$$\tfrac{1}{6}bd^2 = \frac{1{\cdot}75 \times 25}{6} = 7{\cdot}3,$$

and M is 40,000 inch lbs. = 17·85 inch tons.

Therefore $$f = \frac{17{\cdot}85}{7{\cdot}3} = 2{\cdot}45, \text{ say } 2{\cdot}5 \text{ tons per square inch.}$$

There will thus be a tensile stress of this amount in the upper edge of section x_{10}, and a compressive stress of equal amount in the lower edge of the section.

When the rod is in the lower position and at right angles to the crank, the bending moment curve on the rod due to its own mass will be exactly the same as in Fig. 178, but the bending moments will be of opposite sense. The effect of the valve gear at R will not be quite the same, but whatever its magnitude its sense will change and will be the same as the sense of the bending moment due to the mass of the rod. The bending moment curve of Fig. 178 will therefore approximately represent the total bending moment on the rod for the lower position, it being understood that the sense of the moments is reversed. Consequently section x_{10} will now have to sustain a compressive stress in its upper edge, and a tensile stress in the lower edge. The stress acting therefore alternates between a maximum tensile stress of 2·5 tons per square inch and a maximum compressive stress of 2·5 tons per square inch. The range of stress is thus 5 tons per square inch. So long as the range of stress is within the elastic limit of the material (15 to 16 tons per square inch for mild steel) the rod is safe, but to have a factor of safety the range should not exceed 8 tons per square inch at the highest speed ever reached by the engine.

When the stress due to acceleration at any point of a given section is known for any one speed the corresponding stress at any other speed can easily be computed, because these stresses vary as the squares of the speeds.

Thus at 80 miles per hour the stress f at x_{10} is found from

$$f : 2{\cdot}5 = 68^2 : 80^2,$$

Digitized by Google

from which

$$f = 3{\cdot}46 \text{ tons per square inch,}$$

giving a range of stress of 6·92 tons per square inch.

The stresses due to the inertia loading of the rod are of course in addition to the stresses in the rod due to the transmission of force between the crosshead and crank pin, and to the stress caused by the moving of the valve against friction.

Any other link of the valve gear may be examined in the same way, bearing in mind that the inertia loading of the link is to be computed for the position where it is a maximum.

It may be pointed out that if a rod is found to be weak when examined for the acceleration stress, no addition is made to the strength by merely increasing its width, because by doing this the inertia load is increased exactly in the same proportion as the modulus of the section, and f remains the same. But if the depth of the rod is increased although the inertia loading increases in proportion to the increase of depth, the value of Z increases as the square of the depth.

148. Link motion. Velocity diagram. The preceding method may be applied to find the velocity and acceleration of all points in a link motion, but neither the velocity nor the acceleration diagram can be drawn directly as in the case of the Joy gear. It will be remembered that the position of the link for a given crank angle can only be found by a process of fitting a template of the link to three curves which are respectively the loci of the ends of the eccentric rods and the end of the suspension link. The same kind of difficulty occurs in the drawing of the velocity and acceleration diagrams. This may be illustrated by drawing the velocity diagram for the position of the link motion shown in Fig. 180.

Take any pole V, Fig. 181. Draw Va at right angles to the eccentric QA, and Vb at right angles to the eccentric QB, making the length of each of these proportional to the respective velocities of the points A and B. In general these will be each equal to ωr, ω being the angular velocity of the crank shaft, and r the eccentric radius.

The direction of motion of the point E of the link relatively to A is at right angles to the eccentric rod AE. Draw therefore an indefinite line through a in the velocity diagram at right angles to the rod AE. Again the direction of motion of the point F of the link relatively to B is at right angles to the eccentric rod BF. Draw therefore an indefinite line through b in the velocity diagram at right angles to the eccentric rod BF.

Again the direction of motion of the point S of the link is at right

Digitized by Google

angles to the suspension link *US*. Draw therefore in the velocity diagram an indefinite line through the pole *V* at right angles to *US*. Then, joining *S* to *E* and *F*, a triangle must be found in the velocity diagram similar to *ESF*, placed so that its sides are at right angles to

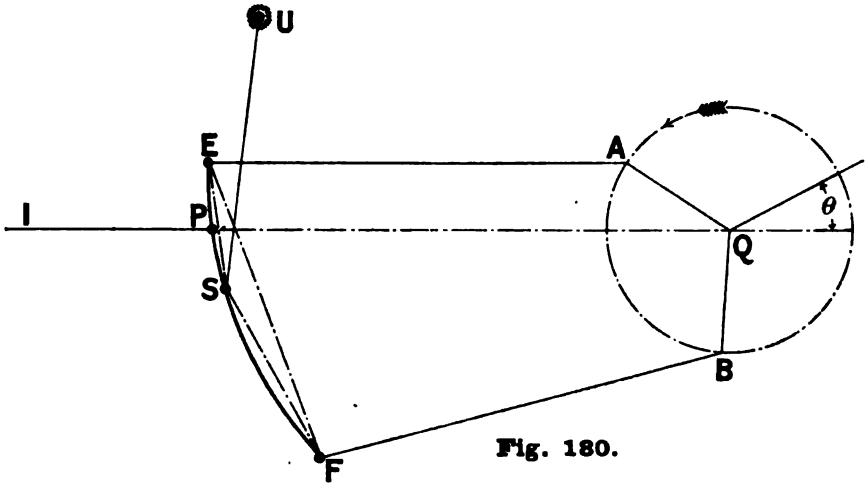

Fig. 180.

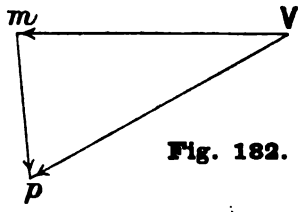

Fig. 182.

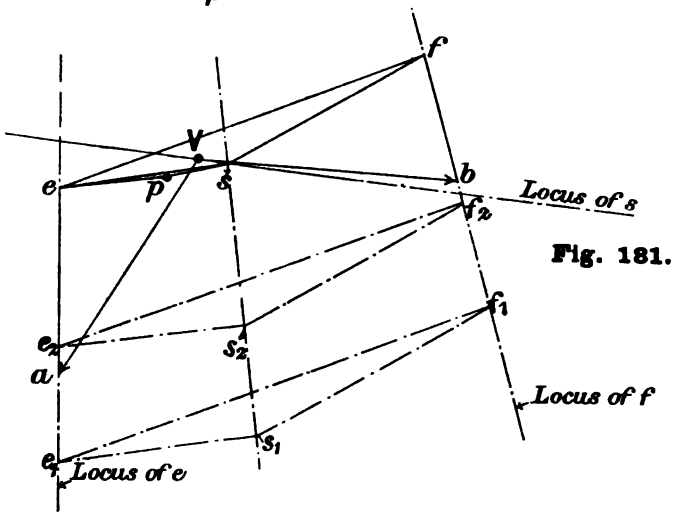

Fig. 181.

LINK MOTION. VELOCITY DIAGRAM.

Digitized by Google

the corresponding sides of the triangle *ESF*, and so that its corners lie upon the indefinite lines which have already been drawn in the velocity diagram. This triangle *esf* is the velocity image of the triangle *ESF*.

By constructing a triangle on *es* similar to the triangle *ESP* the position of *P* is found in the image. The triangle may be found by the following construction:—

Draw any line e_1f_1 at right angles to *EF* and construct a triangle $e_1f_1s_1$ similar to the triangle *ESF*. Again draw any other line e_2f_2 at right angles to *EF* and construct a triangle $e_2f_2s_2$ similar to *ESF*. Then the indefinite line joining the points s_1s_2, is the locus of the apexes of all the triangles similar to *ESF* which have the end points of their bases on the loci of *e* and *f*. Therefore the point *s*, where the line joining s_1 and s_2 cuts the required locus of *s*, is the position of the apex of the required triangle. Then

Vp is the velocity of the centre of the motion block,
Vs the velocity of the point of suspension,
Ve the velocity of the upper end of the link,
Vf the velocity of the lower end of the link;

and the velocity of any point in the gear can be found when the corresponding point is located in the velocity diagram and joined to *V*. The method need not be pursued, particularly as the objects of the construction, namely the finding ultimately of the acceleration of the various points in order to obtain the forces acting on the mechanism, can be found with sufficient accuracy for practical purposes by simpler approximate processes.

It may be pointed out that the velocity of the point *P* in the diagram is in the direction *Vp*, and this is drawn to a larger scale in Fig. 182. The centre of the motion block is, however, constrained to move in a direction *PI*. It follows that the block must slide, or slip in the link to allow this to take place. The direction in which this relative motion is possible is parallel to the tangent to the link at the point *P*. Hence if a line *pm*, Fig. 182, be drawn parallel to the tangent to the point *P* of the link cutting the direction of motion of the motion block in *m*, *Vm* is the velocity of the valve spindle, and *mp* is the velocity of the motion block relatively to the link, that is the instantaneous velocity of slip.

149. Link motion. Inertia forces. The link is at any instant a beam supported at its ends, with a load applied at the centre of the motion block. The design of the link therefore requires that the maximum bending moment on the link should be estimated. The load on the link is made up of two parts, namely:—

Digitized by Google

(1) The static force required to move the valve against the friction produced by the steam pressures plus the gland friction.

(2) The inertia loading due to the acceleration of the valve, valve spindle and parts up to the motion block which have the same motion as the valve.

The estimation of the first part is not difficult when the form of valve is given.

The second part requires the acceleration of the valve to be found. For all practical purposes this can be found at any instant from the approximate displacement equation (5), given in Article 97. This equation, expressed in terms of the equivalent eccentric, is

$$x = \rho \cos(\theta + \psi).$$

When the crank is revolving uniformly the angle θ increases uniformly with the time, so that if ω is the angular velocity, the angle turned through in t seconds is ωt, and hence $\theta = \omega t$. Hence

$$x = \rho \cos(\omega t + \psi).$$

Differentiating this with regard to the time, the velocity of the valve is

$$v = \dot{x} = -\omega\rho \sin(\omega t + \psi),$$

and the acceleration is

$$a = \ddot{x} = -\omega^2 \rho \cos(\omega t + \psi),$$

and this is a maximum when $\omega t + \psi = 0$ or 180 degrees, in which case it is equal to $\omega^2\rho$. If W is the weight of the valve and all the parts attached to it which move with the same motion, reckoned up to the motion block, the maximum accelerating force is

$$F = \frac{W}{g}\omega^2\rho.$$

This force is a maximum for a given speed when the link motion is in full gear, since then, ρ has its maximum value. It is a minimum in mid-gear since then ρ has a minimum value. For a given speed the force varies as the magnitude of the radius of the equivalent eccentric ρ, and if its value be plotted on the link an estimation of the maximum bending moment can soon be made.

To illustrate this consider the Great Eastern Railway link motion, Fig. 76. The length of the equivalent eccentric in full gear is about two inches. At 60 miles per hour, with driving wheels 7 feet in diameter, the crank shaft makes almost exactly 4 revolutions per second, so that ω is equal to 25·12 and $\omega^2 = 632$. The maximum

Digitized by Google

acceleration of the valve and the associated valve spindle is thus equal to

$$\omega^2\rho = \frac{632 \times 2}{12} = 105{\cdot}3 \text{ ft. per sec. per sec.}$$

If the valve, valve spindle, etc., weigh 200 pounds, the force required for acceleration is

$$\frac{200}{32{\cdot}2} \times 105{\cdot}3 = 654 \text{ lbs.}$$

The force required to overcome the friction of the valve would be about 2000 lbs. (see Article 24) so that the total force exerted by the link would be in the region of 2650 lbs. The effect of the inertia of the valve and its attachments is thus seen to be considerable at high speed.

A locomotive would not run in full gear at 60 miles per hour, so that the above example may be considered as exhibiting an extreme case. The engines of torpedo boats, however, run at high speeds in full gear, and the above example indicates how to find the loading on the link of engines of this type.

150. Link motion. Inertia stresses in the eccentric rod. The maximum stress in an eccentric rod, due to the inertia loading, at a given speed, may be found by the semi-graphical method already exemplified in Article 147 for the Lancashire and Yorkshire connecting rod, the assumption being made that the end of the eccentric rod moves in a straight line which passes through the centre line of the crank axle. The curve representing the weight of the rod would be in most cases simpler in form than that shown in Fig. 177, in fact for all practical purposes the weight of the eccentric rod per foot may be considered constant, and equal to the mean weight of the rod per foot, this mean weight being calculated from the central part of the stem of the rod. Let w be the mean weight per foot of the rod,

l the length in feet,
r the eccentricity,
ω the angular velocity.

Then the maximum bending moment occurs at a section distant $0{\cdot}58l$ feet from the small end of the rod, and its value is

$$0{\cdot}065\,\frac{l^2 w\omega^2 r}{g} \text{ foot lbs.} \qquad (1).$$

These expressions are easily proved. As in Article 147, and illustrated in Fig. 177, the acceleration of the crosshead centre may be taken equal to zero; the acceleration of the eccentric strap centre is $\omega^2 r$; and

Digitized by Google

the acceleration of a point along the rod may be taken as proportional to the distance of the point from the small end. Let AB, Fig. 183, be the rod, and let BC represent the acceleration of the centre of the eccentric strap. Then the inertia load per foot, at a distance x from the small end, will be $\frac{w\omega^2 rx}{gl}$, the value of which is zero at the small end and $\frac{w\omega^2 r}{g}$ at the crank end. Represent this latter quantity by the symbol γ shown by BD in Fig. 183. Then the problem is reduced to finding the maximum value of the bending moment for a beam supported freely at each end

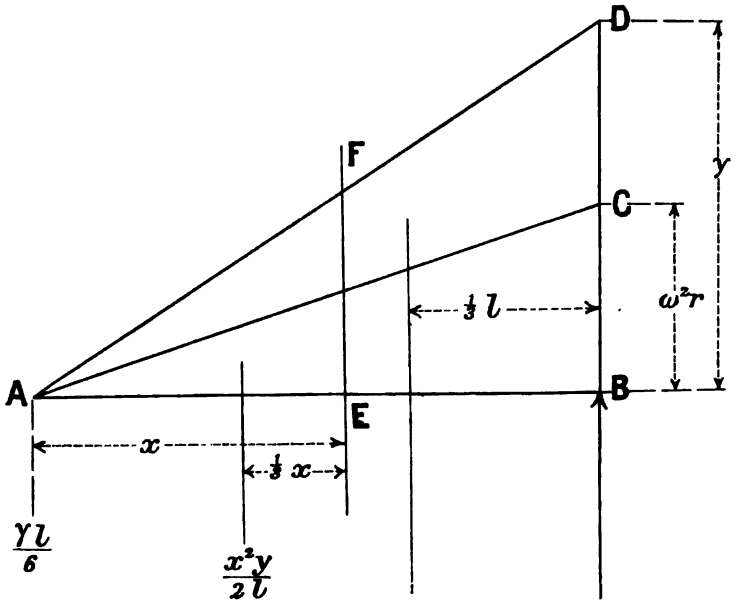

Fig. 183. Bending Moment due to Inertia Loading. Approximate Solution for an Eccentric Rod.

and carrying a load varying as the distance from one support. Let this loading be represented by the triangle ABD. Then the whole load is $\frac{\gamma l}{2}$, acting at the centre of gravity of the triangle ABD, which is $\frac{l}{3}$ from the support B. The reaction at A corresponding to this is $\frac{\gamma l}{6}$.

Consider a section EF, distant x from A. Then the bending moment there will be that due to the reaction at A, minus the moment of the area AEF. EF is equal to $\frac{x\gamma}{l}$, so that the load represented by

Digitized by Google

the area AEF is $\frac{x^2\gamma}{2l}$ acting at $\frac{x}{3}$ from EF. Thus the bending moment is

$$M = \frac{\gamma l x}{6} - \frac{x^3\gamma}{6l}.$$

Differentiating this and equating the result to zero, M is found to be a maximum when $x = 1/\sqrt{3} = 0{\cdot}58l$. Substituting this value of x in the equation for M, the maximum value is found to be $0{\cdot}065l^2\gamma$ as above stated and the corresponding maximum stress in the section is $\frac{My}{I}$.

Consider an eccentric rod 4·5 feet long, centre to centre, with an average section 3½ inches deep and 1 inch wide. This would weigh about 11 pounds per foot run. Let the eccentric radius be 3 inches. Calculate the maximum stress due to the inertia loading when the engine runs at 80 miles per hour, the driving wheels being 7 feet in diameter.

At 80 miles per hour the angular velocity is 33·5.

Substituting these data in expression (1) above, remembering that r must be expressed in feet,

$$\text{Maximum bending moment} = \frac{0{\cdot}065 \times 4{\cdot}5^2 \times 11 \times 33{\cdot}5^2 \times 3}{32{\cdot}2 \times 12}$$
$$= 127 \text{ foot pounds}$$
$$= 1524 \text{ inch pounds.}$$

The section is rectangular and at $0{\cdot}58l$ from the small end is taken to be 3½ inches deep and 1 inch wide. The modulus of this section, namely, $\frac{1}{6}bd^2$, is approximately 2. Hence the maximum tensile, or maximum compressive stress due to the inertia loading is

$$\frac{M}{Z} = \frac{1524}{2} = 762 \text{ lbs. per square inch approximately.}$$

This is a small amount, and indicates that with the deep section of the eccentric rods usual in locomotive practice, the inertia loading is fully provided for. In cases where round eccentric rods are used, as in some types of modern high-speed engines, the stress would probably be higher because the circular section, though well adapted to act as a strut, does not give sufficient depth in the plane of motion to keep the inertia stress within small limits if its diameter is fixed solely with regard to the forces it is required to transmit between the eccentric sheave and the valve.

A connecting rod may of course be examined in the same way, and inasmuch as the radius of the crank is so much greater the inertia loading is much more severe than in the case of an eccentric rod.

Digitized by Google

151. Stresses in an eccentric rod, a connecting rod, or coupling rod due to the inertia loading and an end thrust combined. When a rod is transmitting a load along it as a strut, the load being applied at the ends so that the line of action of the load passes through the centre of gravity of every section of the rod, the stress over each section is uniformly distributed, so that if A is the area of a particular section, and F the end load, the stress is

$$\frac{F}{A} \text{ lbs. per square inch.}$$

If there is inertia loading also, causing a bending moment at the section of M inch lbs., and if Z is the modulus of the section, the maximum stress at the section due to the lateral inertia load is

$$\frac{M}{Z} \text{ lbs. per square inch.}$$

Z is here assumed to be the same for both tension and compression.

If the rod be assumed to remain perfectly straight under the action of the bending moments so that no deflection occurs to modify the condition stated above, the maximum stress at the particular section whose area is A and whose modulus is Z is

$$f = \frac{F}{A} + \frac{M}{Z} \text{ lbs. per square inch} \quad \ldots\ldots\ldots\ldots\ldots(1).$$

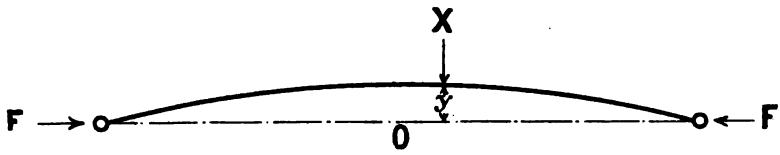

Fig. 184. Bending Moment due to Thrust.

If however the bending of the rod is taken into account it will be seen from Fig. 184 that at any section X, the bending moment on the rod is that due to the inertia loading plus the bending moment Fy due to the thrust. Hence the total bending moment on any section is

$$(Fy + M),$$

and the relations between the several quantities concerned are obtained from the well-known equation connecting deflection y and bending moment

$$EI\frac{d^2y}{dx^2} = -(Fy + M).$$

That is

$$EI\frac{d^2y}{dx^2} + Fy = -M \quad \ldots\ldots\ldots\ldots\ldots\ldots\ldots\ldots(2).$$

Digitized by Google

Before this equation can be solved, the bending moment due to the lateral loading must be expressed as a function of x, and with any loading this can always be done approximately by means of a series, which series being substituted for M enables the equation to be solved by the ordinary rules for the purpose.

Equation (2) represents a particular case of the general subject of struts or ties with lateral loads, a subject which has been thoroughly investigated by Professor Perry*. A simple illustration may be taken from Professor Perry's paper. Consider a coupling rod of a locomotive, of uniform cross section, and weighing w lbs. per foot. The inertia loading is given by

$$\frac{w\omega^2 r}{g} \text{ lbs. per foot run,}$$

where ω is the common angular velocity of the cranks and r the radius of each crank in feet. The total inertia load is therefore, l being the length of the coupling rod centre to centre in feet,

$$\frac{w\omega^2 rl}{g} \text{ lbs.}$$

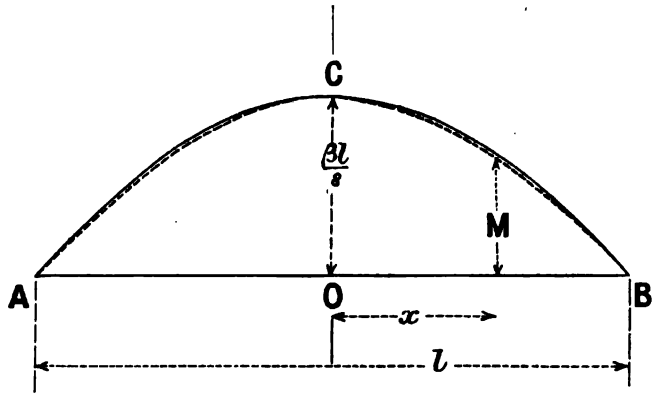

Fig. 185. Bending Moment due to Inertia Loading.

Let this quantity be represented by β. The bending moment diagram is a parabola, Fig. 185, whose maximum ordinate, OC, represents the maximum bending moment

$$\frac{\beta l}{8}.$$

The dotted cosine curve drawn through the points A, C, B is not greatly different from the parabolic curve. It may therefore be taken to

* "Struts and Tie-rods with Lateral Loads," by Professor John Perry, D.Sc., F.R.S., *Philosophical Magazine*, March 1892.

Digitized by Google

represent the bending moment curve without introducing sensible error, and this substitution makes the solution of equation (2) quite simple. Observe that the distance OB represents an angle $\frac{\pi}{2}$ in relation to the cosine curve, and since this distance also represents $\frac{1}{2}l$, any distance x represents an angle $\frac{\pi}{l}x$. Hence the bending moment corresponding to x is given by

$$M = OC \cos\frac{\pi x}{l} = \frac{\beta l}{8}\cos\frac{\pi x}{l}.$$

Substituting this in equation (2),

$$EI\frac{d^2y}{dx^2} + Fy = -\frac{\beta l}{8}\cos\frac{\pi x}{l}.$$

The solution of this equation is

$$y = \frac{\frac{\beta l}{8}\cos\frac{\pi x}{l}}{\frac{EI\pi^2}{l^2} - F},$$

and the maximum deflection at the centre, corresponding to $x = 0$, is

$$y_{\max} = \frac{\frac{\beta l}{8}}{\frac{EI\pi^2}{l^2} - F}.$$

The greatest bending moment is therefore

$$Fy_{\max} + M = \frac{\beta l}{8}\left\{1 + \frac{F}{\frac{\pi^2 EI}{l^2} - F}\right\}.$$

The quantity $\frac{\pi^2 EI}{l^2}$ gives the buckling load of an ideal column. Call this P, and then the greatest bending moment is given by

$$\frac{\beta l}{8}\left\{\frac{P}{P-F}\right\} \qquad \text{(3)}.$$

Divide numerator and denominator of the quantity in the bracket by A, the area of the strut, so that

$\frac{P}{A} = p$, the buckling load of the strut per square inch in the plane of bending;

$\frac{F}{A} = s$, the load per square inch due to the end thrust.

Digitized by Google

Then, if Z is the modulus of the section at the centre of the rod, the maximum stress at the centre, when the coupling rod is in its highest or lowest position, is

$$f_{\max} = s + \frac{\beta l}{Z8}\left\{\frac{p}{p-s}\right\} \quad \text{.....(4)},$$

that is, s due to the direct loading, and the quantity represented by the second term due to the maximum bending moment caused at the centre by the inertia loading. This formula may be applied to find the maximum speed at which a coupling rod may be driven when the maximum stress at the central section is assigned. Considered as a strut, a coupling rod would fail sideways, the buckling load per square inch at which this would happen being the highest possible value for s. If this value be ascertained and inserted in equation (4), then a value of β can be computed; and since $\beta = \frac{w\omega^2 rl}{g}$, ω, the maximum angular velocity corresponding with the assumed conditions, can be found.

The maximum value of M in expression (1) is $\frac{\beta l}{8}$, hence, comparing expression (4) with expression (1), it will be seen that the only difference is in the factor $\frac{p}{p-s}$, which is multiplied into the second term in expression (4).

Consider a coupling rod 100 inches long, $1\frac{1}{2}$ inches wide, and 4·5 inches deep. The weight of this will be about 22·5 pounds per foot. Let the crank radius be 10 inches and the wheels 6′ 6″ diameter. Calculate the maximum stress at the central section when the speed is 60 miles per hour and there is an end thrust of 1 ton per square inch, using first expression (1) and then expression (4). With the dimensions given $Z = \frac{1}{6}bd^2 = 5{\cdot}06$.

With 6 feet 6 inch wheels the angular velocity of the crank shaft at 60 miles per hour is

$$\omega = 27{\cdot}1, \text{ hence } \omega^2 = 734.$$

Hence $\beta = \frac{22{\cdot}5 \times 734 \times 10 \times 100}{2240 \times 32{\cdot}2 \times 12 \times 12} = 1{\cdot}59 =$ total inertia loading in tons.

And the corresponding maximum stress at the centre of the rod is

$$\frac{\beta l}{8Z} = \frac{1{\cdot}59 \times 100}{8 \times 5{\cdot}06} = 3{\cdot}93 \text{ tons per square inch.}$$

Digitized by Google

The quantity p for a strut 100 inches long and $4\frac{1}{2}$ inches deep calculated from $\frac{\pi^2 Ek^2}{l^2}$ is approximately 20 tons. Hence the factor

$$\frac{p}{p-s} = \frac{20}{20-1} = 1{\cdot}05.$$

Hence from (1) $\quad f_{\max} = 1 + 3{\cdot}93 \text{ tons} \quad = 4{\cdot}93 \text{ tons}$

and from (2) $\quad f_{\max} = 1 + (3{\cdot}93 \times 1{\cdot}05) \text{ tons} = 5{\cdot}13 \text{ tons}.$

The deduction of expression (4) and the working of the example are sufficient to show the nature of the general problem of laterally loaded struts. With connecting rods, even of simple form and cross section, the exact expression for the inertia loading per foot is complex, and the resulting work in connection with the finding of y, the deflection, and from that an expression corresponding to (4), is tedious and hardly necessary for problems connected with coupling rods, connecting rods, and eccentric rods belonging to locomotives. For in the first place the end thrusts are small at high speed, and in the second place the deflections produced by the thrusts are small, and therefore for the purpose in view the maximum stress may usually be estimated by the simpler method of neglecting the deflection and using equation (1). A series of articles appeared in *The Engineer**, in which the subject of coupling and connecting rods is exhaustively treated.

* "Connecting and Coupling Rods," by P. H. Parr, *The Engineer*, Vol. xcv., January to June 1903.

Digitized by Google

CHAPTER X.

REPRESENTATION OF A VALVE DISPLACEMENT CURVE BY A TRIGONOMETRIC SERIES.

152. Preliminary remarks. Many examples have been given above of the representation of a valve displacement curve by two terms of a trigonometric series. In fact the displacement curves of all the reversing motions are approximately represented by an equation of the form

$$x = A \cos \theta + B \sin \theta,$$

where x is the displacement of the valve from its central position when the crank angle is θ, and the constants A and B are found from the dimensions of the gear.

Again, the displacement of the piston from its central position given by expression (1), Article 71, may, by the substitution of

$$\frac{1 - \cos 2\theta}{2} \text{ for } \sin^2 \theta,$$

be transformed into

$$X = R \cos \theta - \frac{R^2}{4l} \cos 2\theta + \frac{R^2}{4l},$$

which may be written

$$X = A_1 \cos \theta + A_2 \cos 2\theta + A_0,$$

where A_1, A_2 and A_0 are constants calculated from the dimensions of the gear.

These two examples are only special cases of Fourier's general theorem that any single-valued periodic function of θ may be represented by a trigonometric series of sines and cosines of multiple angles with a constant term added.

Referring to Fig. 98, it will be seen that the actual valve displacement curve there shown in full lines, is slightly different from the dotted curve which is assumed to approximately represent it, and which may be obtained by plotting the expression

$$x = A \cos \theta - B \sin \theta,$$

where A and B have the values $-1{\cdot}04$ and $1{\cdot}52$ respectively.

Digitized by Google

If the expression were continued to a few more terms, say

$$x = A_0 + A_1 \cos\theta + A_2 \cos 2\theta + B_1 \sin\theta + B_2 \sin 2\theta,$$

then the agreement between the curve plotted from the expression and the actual curve would be much closer, in fact the agreement between the actual curve and the curve plotted from the trigonometric series can be made exact, provided there are a sufficient number of terms in the series.

Each term however involves a coefficient, so that if there were twenty terms there would be twenty coefficients besides the constant term A_0.

There are two points of view from which to consider the question. The first is, given a mechanism, to find a trigonometric series which will represent the displacement of any given point in the mechanism in terms of some variable like the crank angle, the coefficients A, B being calculated from the dimensions of the mechanism. The analytical work involved in calculating only a few coefficients from the dimensions of the mechanism is so formidable that generally speaking only a few terms can be found.

The second point of view is, given the actual displacement curve of a point in a mechanism, to find a trigonometric series which will represent the curve. This can be done for any displacement curve providing only that for a given value of the angle θ there is one and only one value of the displacement, a condition generally fulfilled by mechanisms used by engineers.

In order that the matter may be thoroughly understood, the way a curve may be built up by means of sines and cosines, and then the way a curve may be analysed into sine and cosine components will be explained in the next few articles.

In the following remarks the angle θ is expressed in radians, not in degrees.

It may also be noticed that in the illustrating figures the axis of the independent variable θ is placed vertically, instead of horizontally, in order that the diagrams may correspond with the general arrangement of the valve displacement diagrams. It is only necessary to give the book a quarter turn in the counter-clockwise direction to obtain the figures with the θ axis horizontal, as in the usual mode of representation.

The ordinates to a sine curve are denoted by the letter s, and to a cosine curve by the letter c.

153. A value of the coefficient B may be found so that the curve, $s = B \sin\theta$, will pass through a given point P, whose

Digitized by Google

ordinate, s, has any value positive or negative, and whose abscissa, θ, has any value between 0 and π. Let s_1 and θ_1 be the coordinates of the given point P. Substitute these values in the equation and solve for B, thus

$$B = \frac{s_1}{\sin \theta_1}.$$

The curve which passes through the point $s_1 = 1{\cdot}7$ and $\theta_1 = \frac{\pi}{4}$ is shown in Fig. 186.

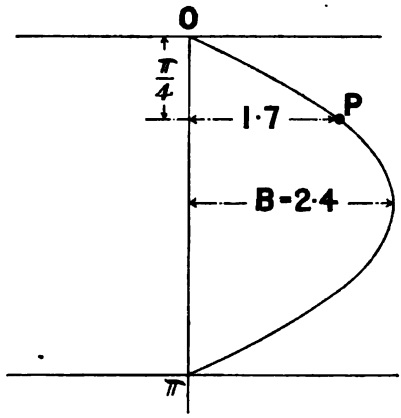

Fig. 186. SINE CURVE ADJUSTED TO PASS THROUGH ONE GIVEN POINT, P.

154. Values of the coefficients B_1 and B_2 may be found so that the curve

$$s = B_1 \sin \theta + B_2 \sin 2\theta$$

will pass through any two points P_1 and P_2, respectively defined by the coordinates s_1, θ_1, and s_2, θ_2, where s_1 and s_2 may have any values positive or negative and θ_1 and θ_2 any values between 0 and π. For there are two unknown quantities, B_1 and B_2, and by substituting the values of s_1, θ_1, and s_2, θ_2, in the given equation, there results a pair of simultaneous equations from which B_1 and B_2 may be found.

Example.

Let $s_1 = 3$, $\theta_1 = 1$ radian, define the point P_1, Fig. 187,

and $s_2 = -0{\cdot}2$, $\theta_2 = 2$ radians, define the point P_2.

Substituting these values in the equation we have

$$3 = B_1 \sin 1 + B_2 \sin 2,$$
$$-0{\cdot}2 = B_1 \sin 2 + B_2 \sin 4.$$

Digitized by Google

Now $\sin 1 = 0{\cdot}8415$, $\sin 2 = 0{\cdot}91$, and $\sin 4 = -0{\cdot}756$.

Introducing these values in the equations and solving for B_1 and B_2,

$$B_1 = 1{\cdot}41,$$
$$B_2 = 1{\cdot}98.$$

Therefore if the curve

$$s = 1{\cdot}41 \sin\theta + 1{\cdot}98 \sin 2\theta \quad \text{.....(1)}$$

be plotted, it will be found to pass through the two given points P_1 and P_2.

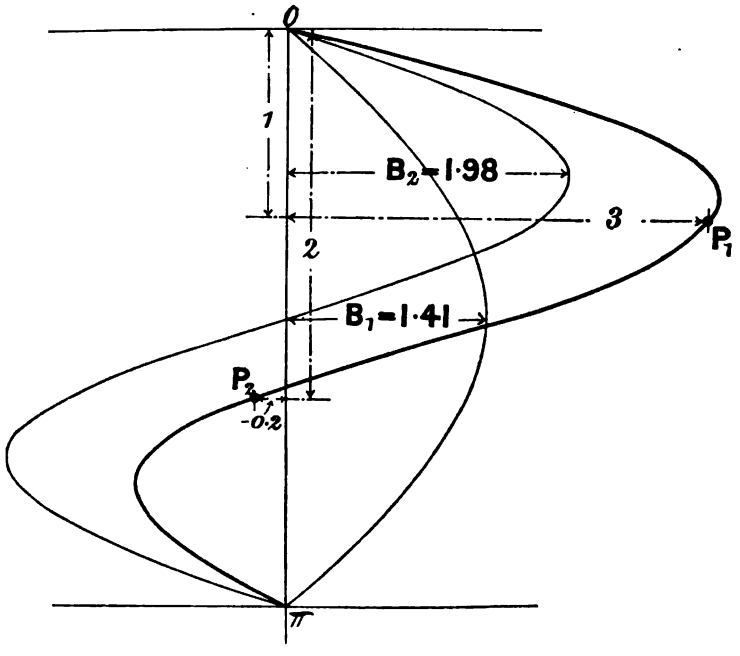

Fig. 187. Sine Curve adjusted to pass through two given points, P_1, P_2.

The component curves $s = 1{\cdot}41 \sin\theta$ and $s = 1{\cdot}98 \sin 2\theta$ are shown in Fig. 187 by thin lines. The sum of the ordinates of these curves gives the thick curve represented by equation (1).

155. Values of the coefficients B_1, B_2.....B_n may be found so that the curve

$$s = B_1 \sin\theta_1 + B_2 \sin 2\theta + B_3 \sin 3\theta + \ldots\ldots + B_n \sin n\theta$$

will pass through n given points between 0 and π, there being one point and one point only corresponding to each value of θ.

Suppose n is equal to 7, for instance. Then the introduction of the

Digitized by Google

coordinates of each point successively in the above equation will give seven simultaneous equations, and from these equations the seven unknown coefficients

$$B_1, B_2 \ldots\ldots B_7$$

may be found.

It will now be understood, that the number of terms in a series, is equal to the number of points the curve represented by the series, passes through; and that the coefficients are found from a set of simultaneous equations equal in number to the number of given points.

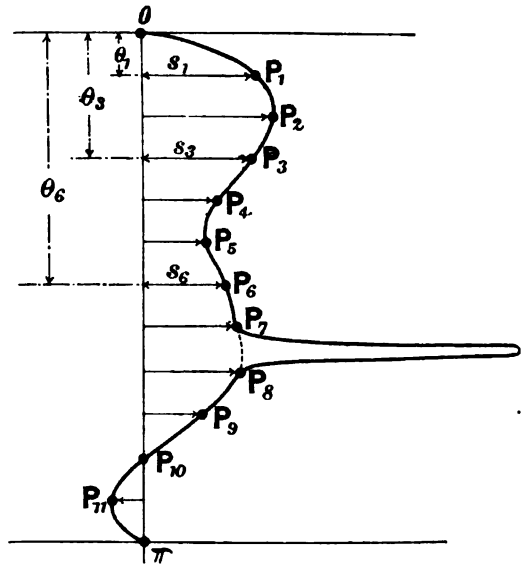

Fig. 188. ARBITRARY CURVE THROUGH ELEVEN POINTS.

Consider the subject from another point of view.

Let 0, $P_1 \ldots\ldots P_{11}$, π, Fig. 188, be any given curve, passing through the points 0 and π, and suppose n points to be selected on the curve, the ordinates of which divide the distance between 0 and π into $n+1$ equal parts. Eleven points are shown in the figure. Then assuming the values of the coefficients B_1, $B_2 \ldots\ldots B_n$ to have been found, the curve plotted from the equation

$$s = B_1 \sin\theta + B_2 \sin 2\theta + \ldots\ldots + B_n \sin n\theta$$

will pass through the n selected points, or in other words, the graph of the equation coincides with the given curve at the n selected points. Between a pair of consecutive points however there may be a wide divergence between the graph of the series and the given curve, as for

Digitized by Google

instance between the points 7 and 8, where the given curve shoots out laterally, and the graph of the equation is indicated by a dotted line.

A little reflection will make it clear however, that if the number of points, n, is indefinitely increased, the graph of the series, and the given curve, will coincide throughout their whole length.

156. To find the value of the coefficients in the series

$$s = B_1 \sin\theta + B_2 \sin 2\theta + \ldots\ldots + B_n \sin n\theta$$

when n is increased indefinitely. The consequence of increasing n indefinitely is, that the trigonometrical series contains an indefinitely great number of terms, and there is an indefinitely great number of equations in the simultaneous set from which the coefficients have to be found.

The analytical difficulties of solving such a set of equations were overcome by Fourier and a full explanation of his analysis and the application to Heat problems, is given in his famous work *Théorie de la Chaleur*, Paris 1822, a translation of which has been made by Freeman and published by the Pitt Press, Cambridge, in 1878. A very clear exposition of the method of solution is given in *Fourier's Series and Spherical Harmonics**, by W. E. Byerly.

It is sufficient for our purpose to state the solution. If B_m be any one of the n coefficients, its value is calculated from

$$B_m = \frac{2}{\pi}\int_0^\pi f(\theta)\sin m\theta \,.\, d\theta,$$

where $f(\theta)$ is written for the general value of the ordinates hitherto represented by s_1, s_2, etc.

Every one of the indefinitely great number of coefficients in the series may be calculated from this expression by giving m in succession the values $1, 2, 3, \ldots\ldots n$, and performing the operation indicated by the integral in each case.

A geometrical illustration may be given of this. Suppose the value of B_2 is to be found for the series which represents the curve $0P\pi$, Fig. 189. The expression for B_2 is

$$B_2 = \frac{2}{\pi}\int_0^\pi f(\theta)\sin 2\theta \,.\, d\theta.$$

Plot the curve $0Q\pi$ from

$$x = \sin 2\theta.$$

Then taking a sufficiently large number of divisions between 0 and π,

* Published by Ginn and Company, Boston, 1893.

Digitized by Google

multiply together corresponding ordinates of the two curves, (be careful of the signs), and plot the product. Thus

$$ab \times (-ac) = -ad.$$

Then the shaded area, multiplied by $\frac{2}{\pi}$, is the value of the coefficient B_2. That is, the value of B_2 is given by twice the mean ordinate of the shaded area. This may be positive or negative according as the shaded area to the right of the vertical axis is greater or less than the shaded area to the left of the axis.

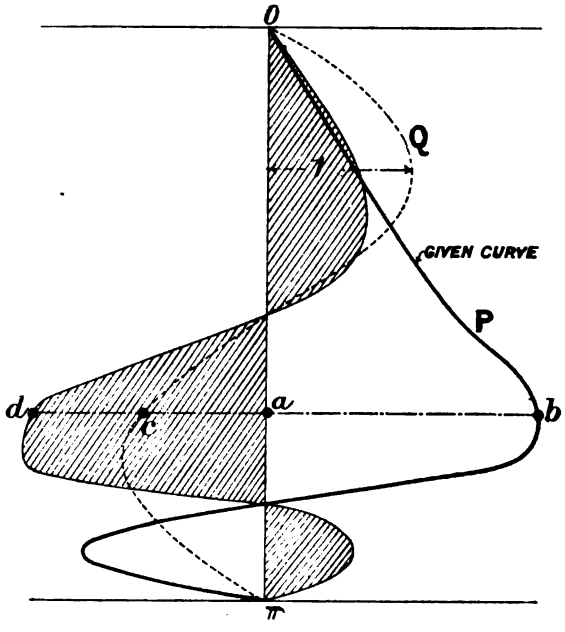

Fig. 189. Geometrical Method of computing the true value of B_2.

In some cases the expression for B_m can be integrated directly, but in most cases concerned with engineering subjects the curves are of arbitrary form and some method founded on the geometrical method just indicated in principle must be used.

In many cases of interest to engineers the successive terms of the series diminish rapidly, so that it is only necessary to retain the first few terms.

For instance, suppose that in a particular case the terms of the series

$$s = B_1 \sin \theta + B_2 \sin 2\theta + B_3 \sin 3\theta + \ldots\ldots + B_n \sin n\theta$$

converge so rapidly that the first three terms represent the given curve

Digitized by Google

with sufficient exactness. Then, briefly summarising the preceding articles, there are two ways of finding the coefficients B_1, B_2 and B_3.

One way is to select three points on the curve, and form three simultaneous equations with their coordinates in the way already illustrated in Art. 154, and solve for B_1, B_2 and B_3.

A second way is to calculate the values by the general method, assuming an indefinitely large number of points on the curve.

The values of the coefficient obtained by the first method will not quite agree with the values obtained by the second method.

Thus, in particular, B_2 would have one value if three points were taken on the curve, another value if four points were taken, another if five points were taken, the value gradually approaching a limit as the number of points is indefinitely increased. If the series converges rapidly, B_2 found from a finite number of points on a given curve will not differ greatly from its limiting value found by the general method.

157. Cosine series. The preceding articles apply *mutatis mutandis* to the cosine series,

$$c = A_0 + A_1 \cos\theta + A_2 \cos 2\theta + \ldots\ldots + A_n \cos n\theta.$$

As indicated by the constant term, the series holds for a zero value of θ. The symbol c is used to represent the ordinates of the curve, and its general value may be written $f(\theta)$.

If A_m be any one of the indefinitely great number of coefficients

$$A_m = \frac{2}{\pi}\int_0^\pi f(\theta)\cos m\theta \,.\, d\theta,$$

$$A_0 = \frac{1}{\pi}\int_0^\pi f(\theta)\, d\theta.$$

The geometrical illustration already given in Fig. 189 applies equally to a cosine series, providing of course the cosine of the multiple angle $m\theta$ is plotted instead of the sine, to find the corresponding value of A_m.

The integral for A_0 merely represents the mean ordinate of the curve $c = f(\theta)$ between the limits 0 and π.

158. Sine and cosine series. From the preceding articles it would appear that it is a matter of indifference whether a sine or a cosine series be chosen to represent a given curve. So long as θ is restricted to values between 0 and π, this inference is correct. But it ceases to be correct if the value of θ is taken through π, to values between π and 2π, as the curves in Fig. 190 show. In the case of the sine series, a pair of ordinates corresponding to values of the angle θ

Digitized by Google

and $2\pi - \theta$ are equal in value but opposite in sign, consequently the curve if continued through π to 2π is symmetrical about the point π.

In the case of the cosine series, a pair of ordinates corresponding to values of the angle θ and $2\pi - \theta$ are equal in value and the same in sign, consequently the curve, if continued through π to 2π, is symmetrical about a horizontal axis through π.

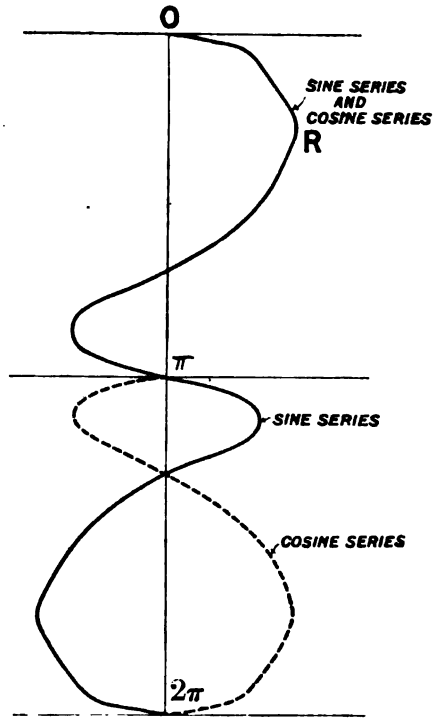

Fig. 190. PROPERTIES OF SINE AND COSINE SERIES.

The two cases are illustrated in Fig. 190, where the curve $0R\pi$, if represented by the series

$$s = B_1 \sin\theta + B_2 \sin 2\theta + \ldots\ldots + B_n \sin n\theta,$$

becomes the thick curve for values between π and 2π; and if represented by

$$c = A_0 + A_1 \cos\theta + A_2 \cos 2\theta + \ldots\ldots + A_n \cos n\theta$$

becomes the dotted curve between π and 2π.

Suppose that the two series represent different curves between 0 and π as shown in Fig. 191, where the dotted curve is

$$s = B_1 \sin\theta + \ldots\ldots + B_n \sin n\theta,$$

Digitized by Google

and the thin curve

$$c = A_0 + A_1 \cos\theta + A_2 \cos 2\theta + \ldots\ldots + A_n \cos n\theta.$$

Add the ordinates, obtaining thereby the thick curve, whose ordinates are

$$x_1 = s_1 + c_1, \quad x_2 = s_2 + c_2, \quad \text{etc.}$$

The resulting curve is quite arbitrary in form and is represented by the series

$$x = A_0 + A_1 \cos\theta + A_2 \cos 2\theta + \ldots\ldots + A_n \cos n\theta$$
$$+ B_1 \sin\theta + B_2 \sin 2\theta + \ldots\ldots + B_n \sin n\theta.$$

The series on the right is known as Fourier's Series.

159. Analysis of a curve, given on a base 2π long, into two component curves, one capable of representation by a sine series the other by a cosine series. Let x_1, Fig. 191, be the ordinate

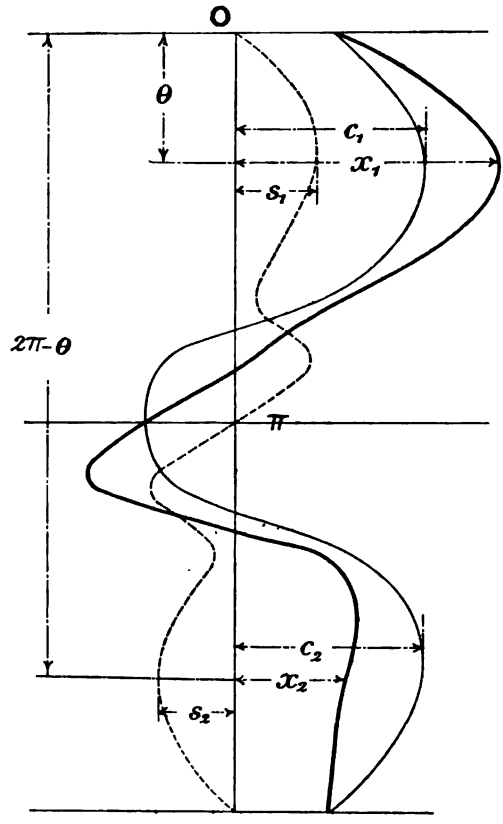

Fig. 191. PROPERTIES OF SINE AND COSINE SERIES.

Digitized by Google

corresponding to θ, and x_2 the ordinate corresponding to $2\pi - \theta$. Then, s_1 and c_1 being the ordinates of the component sine and cosine curves,

$$x_1 = s_1 + c_1,$$
$$x_2 = s_2 + c_2.$$

But in the sine series, for the angles θ and $2\pi - \theta$, $s_1 = -s_2$, and for the cosine series, $c_1 = c_2$.

Hence $\quad x_1 = s_1 + c_1,$

$\quad x_2 = -s_1 + c_1.$

Add $\quad x_1 + x_2 = 2c_1.$

Subtract $\quad x_1 - x_2 = 2s_1.$

Thus by alternately adding and subtracting pairs of ordinates of any given curve corresponding to angles θ and $2\pi - \theta$, the corresponding ordinates of the cosine series and the sine series are respectively found.

160. Adjustment of the expressions for the coefficients to the limits 0 and 2π. Consider the given curve shown by the thick line PQR, Fig. 192. Suppose the second coefficient of the sine series is to be found. Plot the $\sin 2\theta$ curve, shown dotted in the figure. Multiply together corresponding ordinates of the two curves, obtaining the resultant curve

$$x = f(\theta) \sin 2\theta,$$

the area of which is shown cross-hatched.

Then the area of the strip $\Delta\theta$ wide, corresponding to the angle θ, is

$$x_1 = (s_1 + c_1) \sin 2\theta \, \Delta\theta.$$

The area of the strip $\Delta\theta$ wide corresponding to the angle $(2\pi - \theta)$ is

$$x_2 = (-s_1 + c_1)(-\sin 2\theta) \, \Delta\theta.$$

Therefore the sum of the areas of the two strips is

$$2s_1 \sin 2\theta \, \Delta\theta.$$

And the whole shaded area between 0 and 2π, multiplied by $\frac{1}{\pi}$ is the value of the coefficient B_2. That is, the value of B_2 is given by twice the mean ordinate of the shaded area.

Symbolically

$$B_2 = \frac{1}{\pi} \int_0^{2\pi} f(\theta) \sin 2\theta \, d\theta,$$

and generally $\quad B_m = \frac{1}{\pi} \int_0^{2\pi} f(\theta) \sin m\theta \, d\theta.$

For the second coefficient of the cosine series,

$$(s_1 + c_1) \cos 2\theta \,.\, \Delta\theta + (-s_1 + c_1) \cos 2\theta \,.\, \Delta\theta = 2c_1 \cos 2\theta \,.\, \Delta\theta,$$

represents the sum of the areas of two strips, corresponding to angles

Digitized by Google

θ and $2\pi - \theta$, of a curve obtained by multiplying ordinates of the given curve by corresponding ordinates of the $\cos 2\theta$ curve.

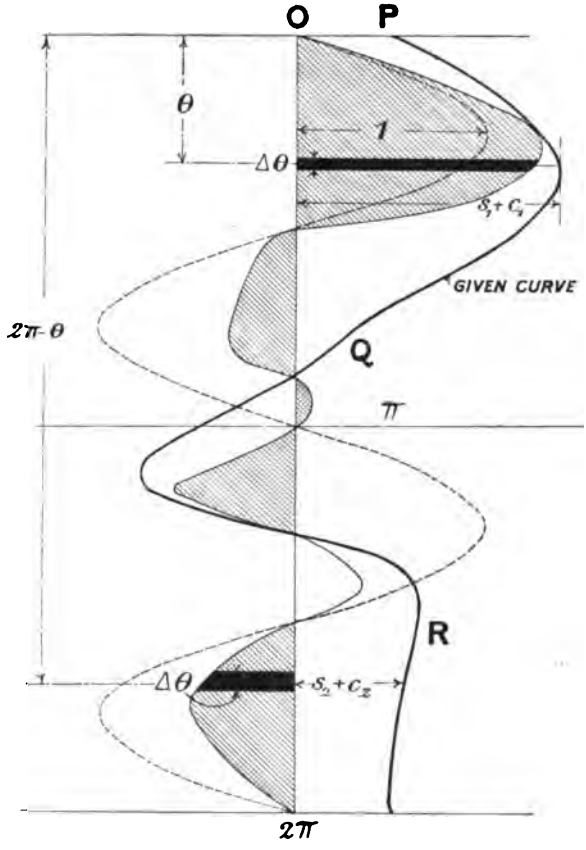

Fig. 192. GEOMETRICAL METHOD OF COMPUTING THE TRUE VALUE OF B_2 WHERE THE BASE IS 2π LONG.

The whole area of the resultant curve multiplied by $\frac{1}{\pi}$ is the value of the coefficient A_2. That is, A_2 is equal to twice the mean ordinate of the shaded area. In general therefore

$$A_m = \frac{1}{\pi}\int_0^{2\pi} f(\theta)\cos m\theta\, d\theta,$$

and also

$$A_0 = \frac{1}{\pi}\int_0^{2\pi} f(\theta)\, d\theta.$$

The obvious advantage of these forms is, that a given curve need not be analysed into its component sine-series and cosine-series curves in order to find the coefficients.

Instruments called "Harmonic Analysers" have been devised for

Digitized by Google

measuring the values of the coefficients directly from a given curve. In the Harmonic Analyser invented by Prof. Henrici*, a tracing point is guided along the given curve, but it records twice the mean ordinate of the shaded area. Or put in another way, the readings give twice the mean ordinate of the unplotted curve $f(\theta)\sin m\theta$ by tracing the curve $x = f(\theta)$.

A change in the mechanism of the instrument must be made for each change in m, and it is constructed so that the first twelve coefficients of the infinite series representing any arbitrary sine curve may be found, six of the coefficients belonging to the sine series and six to the cosine series†.

There are also simplified methods of finding the coefficients from a selected number of points, the simplification arising from the division of the distance 0 to π into equal parts. For an account of a recent method of this kind depending upon the division of the distance 0 to 2π into $4n$ equal parts, see a paper by Dr S. P. Thompson in the *Proceedings of the Physical Society of London*, April 1905, entitled, "Note on a Rapid Approximate Method of Harmonic Analysis," and also Articles in the *Electrician*, Feb. 5, 1905.

These finite-number-of-point methods only give values of the coefficients which approximate to their limiting value.

161. Geometrical method of computing the limiting values of the coefficients $B_1 \ldots\ldots B_n$, $A_0 \ldots\ldots A_n$, when the curve to be represented by the series is given. The multiplication of corresponding ordinates of the given curve and the sine $m\theta$ or cosine $m\theta$ curve which must be combined with it in order to obtain a curve whose area is proportional to the mth coefficient may be avoided by using a method suggested by the late Prof. Clifford‡ and applied by Prof. Perry.

Suppose the sheet of paper on which the given curve 1, 2, 3...12 is drawn, Fig. 193, to be wrapped round a cylinder whose circumference is equal to the length of the base $0 \ldots\ldots 2\pi$ of the curve, so that the ordinates through the points 0 and 2π coincide along the line ab of the cylinder.

Consider a small area $x \times gi$. When the sheet is wrapped on the cylinder this area, as will be seen from the plan of the cylinder, appears in an inclined position. The area of the projection of this area on the vertical plane is

$$x \times jk = x \times gi \,.\, \sin\theta = x \sin\theta \Delta\theta.$$

* "On a new Harmonic Analyser," *Philosophical Magazine*, July 1894.

† The instrument is made by Coradi of Zürich and one form of it is constructed so that the values of five pairs of coefficients may be read after once tracing the given curve.

‡ *Proceedings of the London Mathematical Society*, Vol. v. pp. 11 to 14. See also an article by Prof. Perry in the *Electrician*, 28 June 1895.

Digitized by Google

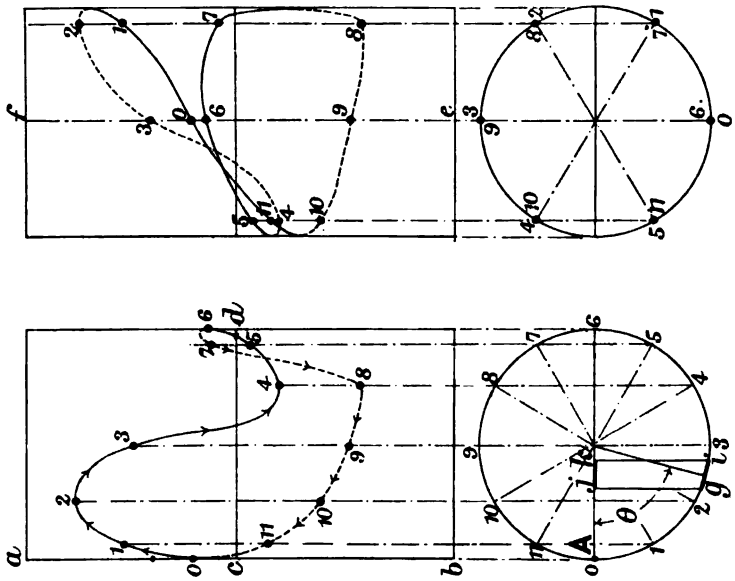

Fig. 193.

Fig. 194.

Fig. 195.

SECOND GEOMETRICAL METHOD OF COMPUTING THE TRUE VALUES OF THE COEFFICIENTS $B_1 \ldots B_n$, $A_1 \ldots A_n$.

Digitized by Google

Thus the whole projected area 1, 2, 3.....12 (suitably interpreted with regard to the vertical scale), divided by the distance in Fig. 193 representing π, is the value of the first coefficient B_1.

Due regard must be given to the signs of the loops in the projected area. Starting from 0, consider the elevation of the projected curve, Fig. 194, to be traced out in the direction 0, 1, 2.....12, and place arrow-heads to indicate this as shown. A loop of the projected area is to be considered positive when the arrow-heads on its boundary point round in the clockwise direction, and negative when they point round in the counter-clockwise direction. Thus in the figure, the area of the loop bounded by the curve passing through the points 0, 1, 2, 3, 4, 8, 9, 10, 11, 12, is positive, and the area of the small loop, bounded by the curve 5, 6, 7, is negative.

If the area is measured with a planimeter, it is only necessary to run the tracing point round the boundary of the projected curve in the direction 0, 1, 2....., the reading giving finally the algebraic sum of all the loops.

To find the second coefficient, suppose the given curve to be wrapped twice round a cylinder whose circumference is half the length of the base of the given curve. Or what is more convenient in practice, suppose the drawing of the curve stretched to double its length and wrapped twice round the same cylinder used for the determination of B_1.

In general, to find B_m, suppose the drawing stretched to m times its length and wrapped round the same cylinder used for finding B_1. The projected curve will wind round the cylinder m times, forming numerous loops. But the area proportional to B_m is always given by guiding the tracing point of a planimeter round the boundary of the curve in the direction 0, 1, 2..... The value of B_m is the area measured in this way, suitably interpreted with regard to the vertical scale, divided by m times the length representing π on Fig. 193.

To find the coefficients of the cosine series, the ordinates through 0 and 2π of the given curve must coincide along the line *ef*, Fig. 195, when the drawing is wrapped round the cylinder, otherwise the process is carried out in precisely the same way.

Fig. 195 shows the curve projected in order to find the second coefficient, A_2, in the cosine series.

The first term of the cosine series, A_0, is simply the mean ordinate of the given curve.

162. Formulae for calculating the approximate values of the coefficients up to third multiple angle*. For the special purpose of analysing a valve displacement curve of the kind belonging

* I am indebted to Dr Silvanus P. Thompson for the formulae of this article.

Digitized by Google

to gears which give a continuous motion to the valve, it is more than sufficiently accurate to divide the distance from 0 to 2π into six equal parts and then to find the series (which will consist of a constant term and six other terms) whose graph will pass through the six points where the ordinates corresponding to 60, 120, 180, 240, 300, and 360 degrees respectively cut the actual displacement curve of the valve.

The series is
$$x = A_0 + A_1 \cos\theta + A_2 \cos 2\theta + A_3 \cos 3\theta + B_1 \sin\theta + B_2 \sin 2\theta + B_3 \sin 3\theta.$$

The way to obtain these formulae is to form the series of simultaneous equations corresponding to the number of points, and then solve them, and this can be done without difficulty. Since, however, the ordinates are spaced 60 degrees apart, they all of them miss the sin 3θ component. To include this, therefore, draw an ordinate at 90 degrees and call its value x_{90}. The way to calculate the coefficients is as follows.

Write down the values of the ordinates in the following schedule and take their respective sums and differences as indicated:—

x_1	x_2	x_3	
x_4	x_5	x_6	
z_1	z_2	z_3	Sums of ordinates.
d_1	d_2	d_3	Differences of ordinates.

Then
$$A_0 = (z_1 + z_2 + z_3) \div 6$$
$$A_1 = (d_1 - d_2 - 2d_3) \div 6$$
$$A_2 = (2z_3 - z_1 - z_2) \div 6$$
$$A_3 = (d_2 - d_1 - d_3) \div 6$$
$$B_1 = (d_1 + d_2) \div 3{\cdot}464$$
$$B_2 = (z_1 - z_2) \div 3{\cdot}464$$
$$B_3 = (A_0 + B_1 - A_2 - x_{90}).$$

163. Examples of the representation of valve displacement curves by a series, neglecting all terms after the third multiple angle.

Example 1. Apply the method of the previous article to find the series representing the displacement curve, marked $u = 4\frac{1}{2}''$, of the Stephenson Link Motion, Fig. 86. Divide the vertical distance TT into six equal parts. Measure the ordinates corresponding to the angles 60, 120, 180, 240, 300, and 360 degrees and arrange them in the schedule form given in the previous article. Thus:—

	$x_1 = -1{\cdot}98$	$x_2 = -0{\cdot}99$	$x_3 = 1{\cdot}03$
	$x_4 = 1{\cdot}80$	$x_5 = 0{\cdot}80$	$x_6 = -1{\cdot}03.$
The sums are	$z_1 = -0{\cdot}18$	$z_2 = -0{\cdot}19$	$z_3 = 0.$
The differences are	$d_1 = -3{\cdot}78$	$d_2 = -1{\cdot}79$	$d_3 = 2{\cdot}06.$

Digitized by Google

Therefore
$$A_0 = -0{\cdot}37 \div 6 = -0{\cdot}0617$$
$$A_1 = \{-3{\cdot}78 + 1{\cdot}79 - 4{\cdot}12\} \div 6 = -1{\cdot}018$$
$$A_2 = \{\ 0{\cdot}18 + 0{\cdot}19\} \div 6 = 0{\cdot}0617$$
$$A_3 = \{\ 3{\cdot}78 - 1{\cdot}79 - 2{\cdot}06\} \div 6 = -0{\cdot}0117$$
$$B_1 = \{-3{\cdot}78 - 1{\cdot}79\} \div 3{\cdot}464 = -1{\cdot}607$$
$$B_2 = \{-0{\cdot}18 + 0{\cdot}19\} \div 3{\cdot}464 = 0{\cdot}00289.$$

The ordinate x_{90} corresponding to 90 degrees measures $-1{\cdot}74$ inches.

Therefore $B_3 = (-0{\cdot}0617 - 1{\cdot}607 - 0{\cdot}0617 + 1{\cdot}74) = 0{\cdot}01.$

The displacement, x, is therefore

$$x = -0{\cdot}0617 - 1{\cdot}018 \cos\theta + 0{\cdot}0617 \cos 2\theta - 0{\cdot}0117 \cos 3\theta$$
$$- 1{\cdot}607 \sin\theta + 0{\cdot}0289 \sin 2\theta + 0{\cdot}01 \sin 3\theta.$$

When $\theta = 0$, this reduces to

$$x_0 = -1{\cdot}0297.$$

When $\theta = 180$, it reduces to

$$x_{180} = +1{\cdot}0297.$$

This confirms the accuracy of the work, since the axis TT was placed so that the displacements should be the same at these two points.

Example 2. The displacement curve, marked $u = 4\frac{1}{2}''$, of the Allan Straight Link Motion, Fig. 110.

It makes the calculations slightly easier regarding signs, if the measurements are taken from a line parallel to the axis TT, but moved to the left, a distance a, so that all the ordinates to the curve are to the right of the axis, and therefore are all of positive sign. The distance a is then to be subtracted from the constant term in the series in order to obtain the constant term with reference to the axis TT. The coefficients are not affected by the position of the axis.

The measurements of six equidistant ordinates, to the curve $u = 4\frac{1}{2}''$, Fig. 110, corresponding to angles 60, 120, 180, 240, 300, and 360, taken from a line parallel to TT, but displaced $2\frac{1}{2}''$ to the left of it, are

$$x_1 = 0{\cdot}55 \quad x_2 = 1{\cdot}76 \quad x_3 = 3{\cdot}77$$
$$x_4 = 4{\cdot}25 \quad x_5 = 3{\cdot}04 \quad x_6 = 1{\cdot}23.$$

The sums are $z_1 = 4{\cdot}80 \quad z_2 = 4{\cdot}80 \quad z_3 = 5{\cdot}00.$

The differences are $d_1 = -3{\cdot}70 \quad d_2 = -1{\cdot}28 \quad d_3 = 2{\cdot}54.$

Applying the formulae of the previous article,

$$A_0 = 2{\cdot}4333$$
$$A_1 = -1{\cdot}25$$
$$A_2 = 0{\cdot}0666$$
$$A_3 = -0{\cdot}02$$
$$B_1 = -1{\cdot}437$$
$$B_2 = 0.$$

Digitized by Google

The ordinate x_{90}, corresponding to 90 degrees, measures 0·94. Hence

$$B_3 = -0{\cdot}01.$$

Subtracting 2·5 from A_0, to change the axis to TT,

$$A_0 \text{ with regard to the axis } TT = 2{\cdot}4333 - 2{\cdot}5 = -0{\cdot}0667.$$

Hence the displacement, x, is given by

$$\begin{aligned} x = -0{\cdot}0667 - 1{\cdot}25\cos\theta + 0{\cdot}0666\cos 2\theta - 0{\cdot}02\cos 3\theta \\ - 1{\cdot}437\sin\theta \qquad\qquad - 0{\cdot}01\sin 3\theta. \end{aligned}$$

Example 3. The displacement curve corresponding to the simple valve gear in combination with a rocking shaft, shown by full lines in Fig. 52, is

$$\begin{aligned} x = -0{\cdot}024 - 0{\cdot}955\cos\theta + 0{\cdot}0283\cos 2\theta + 0{\cdot}02\cos 3\theta \\ - 1{\cdot}075\sin\theta + 0{\cdot}101\sin 2\theta - 0{\cdot}037\sin 3\theta. \end{aligned}$$

These expressions may be used to find the velocity and the acceleration of the valve with great accuracy. Thus, the general expression for the displacement is

$$\begin{aligned} x = A_0 + A_1\cos\theta + A_2\cos 2\theta + \ldots\ldots + A_n\cos n\theta \\ + B_1\sin\theta + B_2\sin 2\theta + \ldots\ldots + B_n\sin n\theta. \end{aligned}$$

Differentiating with regard to the time and writing $\frac{d\theta}{dt} = \omega =$ the assumed constant angular velocity of the crank shaft,

$$\begin{aligned} v = \frac{dx}{dt} = \omega(-A_1\sin\theta - 2A_2\sin 2\theta + \ldots\ldots + nA_n\sin n\theta \\ + B_1\cos\theta + 2B_2\cos 2\theta + \ldots\ldots + nB_n\cos n\theta). \end{aligned}$$

Differentiating again to find the acceleration,

$$\begin{aligned} \frac{dv}{dt} = \omega^2(-A_1\cos\theta - 4A_2\cos 2\theta + \ldots\ldots + n^2A_n\cos n\theta \\ - B_1\sin\theta - 4B_2\sin 2\theta + \ldots\ldots + n^2B_n\sin n\theta). \end{aligned}$$

Applying these expressions to the displacement curve in Example 1 of the present article,

$$\begin{aligned} v = \omega(1{\cdot}018\sin\theta - 0{\cdot}123\sin 2\theta + 0{\cdot}035\sin 3\theta \\ - 1{\cdot}607\cos\theta + {\cdot}058\cos 2\theta + 0{\cdot}03\cos 3\theta), \end{aligned}$$

and the acceleration is

$$\begin{aligned} a = \omega^2(1{\cdot}018\cos\theta - 0{\cdot}247\cos 2\theta + 0{\cdot}105\cos 3\theta \\ + 1{\cdot}607\sin\theta - 0{\cdot}115\sin 2\theta - 0{\cdot}09\sin 3\theta). \end{aligned}$$

164. Formulae for calculating the approximate values of the coefficients up to the second multiple angle. Examples.

Digitized by Google

Equivalent eccentric. To obtain formulae for the coefficients, let x_1, x_2, x_3, x_4 be the ordinates corresponding respectively to angles of 90, 180, 270, and 360 degrees. Introduce these coordinates successively in the equations

$$x = A_0 + A_1 \cos\theta + A_2 \cos 2\theta + B_1 \sin\theta + B_2 \sin 2\theta \quad \ldots\ldots(1),$$

thus forming four simultaneous equations from which the values of the several coefficients may be found. Since these ordinates are spaced 90 degrees apart, they all miss cutting the sin 2θ component curve. To include this therefore take an ordinate at 45 degrees and call it x_{45}.

No difficulty will be found in solving these equations, and verifying the following expression. Write down the ordinates in the following schedule and take their respective sums and differences as indicated.

x_1	x_2	
x_3	x_4	
z_1	z_2	Sums of ordinates.
d_1	d_2	Differences of ordinates.

Then

$$\begin{aligned} A_0 &= (z_1 + z_2) \div 4 \\ A_1 &= -d_2 \div 2 \\ A_2 &= (z_2 - z_1) \div 4 \\ B_1 &= d_1 \div 2 \\ B_2 &= -A_0 - (A_1 + B_1)\,0{\cdot}707 + x_{45}. \end{aligned}$$

Example. Apply these expressions to find the values of the coefficients in the case of the displacement curve, marked $u = 4\frac{1}{2}''$, of the Allan Link Motion, Fig. 110, which has already been analysed in Example 2 of the previous article up to the third multiple angle.

The values of the ordinates, measured from a base 2·5″ from *TT*, Fig. 110, are

$$\begin{aligned} x_1 &= 0{\cdot}94 & x_2 &= 3{\cdot}77 \\ x_3 &= 3{\cdot}79 & x_4 &= 1{\cdot}23 \\ z_1 &= 4{\cdot}73 & z_2 &= 5{\cdot}00 \\ d_1 &= -2{\cdot}85 & d_2 &= 2{\cdot}54. \end{aligned}$$

Then

$$\begin{aligned} A_0 &= 2{\cdot}4325 \\ A_1 &= -1{\cdot}27 \\ A_2 &= 0{\cdot}0675 \\ B_1 &= -1{\cdot}425 \\ B_2 &= 0{\cdot}1625. \end{aligned}$$

Subtracting 2·5 from A_0, to change the axis to *TT*,

A_0 with regard to the axis $TT = 2{\cdot}4325 - 2{\cdot}5 = -0{\cdot}675$.

Digitized by Google

Hence

$$x = -0{\cdot}0675 - 1{\cdot}27 \cos\theta + 0{\cdot}0675 \cos 2\theta - 1{\cdot}425 \sin\theta + 0{\cdot}1625 \sin 2\theta \quad \text{.....(2).}$$

When $\theta = 0$ this reduces to $x = -1{\cdot}27$,
and when $\theta = 180$ it reduces to $x = +1{\cdot}27$.

It will be noticed that the constant term A_0 is equal and opposite in value to the coefficient of $\cos 2\theta$. This is only the case when the valve is set so that the displacements at the dead points are equal and opposite. In the family of displacement curves belonging to a reversing motion there is only one curve to which this condition strictly applies.

The axis from which valve displacements are measured in the case of the curve just analysed does not coincide with the centre of oscillation of the curve, or in fact with the centre of oscillation of any one of the family to which the curve belongs. It is drawn to bisect the horizontal distance between the points on the mid-gear displacement curve corresponding to the dead points. If the equation of the curve had been referred to an axis passing through its centre of oscillation, that is, an axis bisecting the horizontal distance between two points marking the ends of the maximum positive and maximum negative ordinate respectively, there would have been a slight difference in the value of the constant term A_0. In the consideration of the displacement curves of a link motion, it is more convenient to refer them all to one axis than to refer each to one axis through the centre of oscillation, since each curve has a different centre of oscillation.

This displacement curve has now been analysed in three ways. In the first way two terms only of the series were obtained and the coefficients corresponding to them were calculated from the dimensions of the gear. In the remaining two cases the actual displacement curve has been analysed, and four and six terms have been respectively

TABLE 14.

Allan Gear-Constants for full forward displacement curve.

	A_0	A_1	A_2	A_3	B_1	B_2	B_3
Art. 104, page 203		−1·26			1·42		
Art. 163, page 345	−0·0667	−1·25	−0·0666	−0·02	−1·437	0	−0·01
Art. 164, page 347	−0·0675	−1·27	+0·0675		−1·425	+0·1625	

Digitized by Google

retained, and in addition there has been a constant term. It is instructive to compare the several values of the coefficients, bearing in mind the substance of Article 154.

The series (2) written in its general form, namely,

$$x = -A_0 - A_1 \cos\theta + A_2 \cos 2\theta - B_1 \sin\theta + B_2 \sin 2\theta \quad \ldots\ldots(1),$$

may be reduced to a form which is useful for certain purposes.

Thus, grouping the θ terms together, and the 2θ terms together, and multiplying and dividing the θ terms by the square root of the sum of the squares of their coefficients, and doing the same with the 2θ terms, the series may be written

$$x = -A_0 + \rho_1 \cos(\theta + \psi_1) + \rho_2 \cos(2\theta - \psi_2) \quad \ldots\ldots\ldots\ldots(2),$$

where

$$\rho_1 = \sqrt{A_1^2 + B_1^2},$$

$$\rho_2 = \sqrt{A_2^2 + B_2^2},$$

$$\psi_1 = \tan^{-1}\frac{B_1}{-A_1},$$

$$\psi_2 = \tan^{-1}\frac{B_2}{A_2}.$$

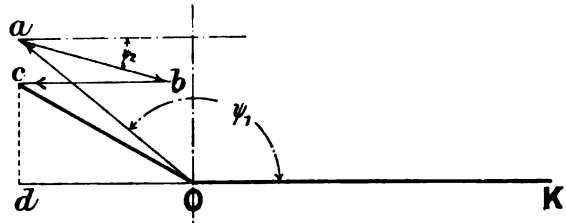

Fig. 196.

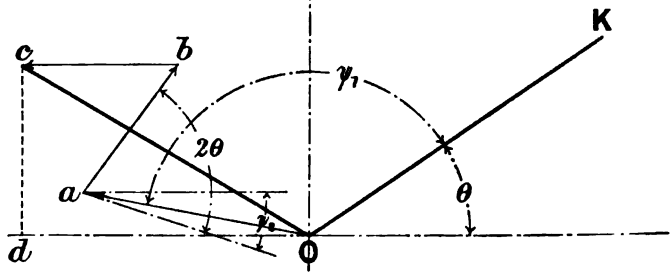

Fig. 197.

EQUIVALENT ECCENTRIC WHICH INCLUDES THE SECOND HARMONIC.

This shows that the displacement, x, is the vector sum of $-A_0$, together with the projections of the equivalent eccentric ρ_1 whose

Digitized by Google

angular advance is ψ_1, and of the equivalent eccentric ρ_2 whose angular lag is ψ_2, the latter eccentric revolving twice as fast as the crank.

Let OK, Fig. 196, represent the crank at the 0 degree dead point. Then Oa is the position of the first equivalent eccentric, and adding the second to the end of this, ab is the corresponding position of the second equivalent eccentric. Adding now bc, to represent the constant term $-A_0$, the vector Oc represents the single equivalent eccentric, whose projection Od is the valve displacement, x, at the dead point.

When the crank has turned through the angle θ, Fig. 197, the line Oa has turned with it through the same angle, but the line ab has turned through twice the angle θ from its initial position. The vector bc remains unchanged in direction, so that the line Oc is now the single equivalent eccentric whose projection Od is the valve displacement corresponding to the crank angle θ. Thus the single equivalent eccentric is changing continuously both in magnitude and angular advance.

165. Modification of the Reuleaux valve diagram to find the displacement, x, for a given value of the crank angle θ, when the displacement is given by

$$x = -A_0 - \rho_1 \sin(\theta + \delta_1) - \rho_2 \sin(2\theta - \delta_2) \quad \text{.....(1).}$$

Mr J. Harrison has modified the Reuleaux diagram, described in Article 53, so that the valve displacement may be found approximately, directly the crank angle is given, when the displacement curve has the above equation, providing that the radius of the secondary equivalent eccentric ρ_2 is small compared with ρ_1. The displacement is measured from the central position of the valve, and in these circumstances the constant A_0 assumes the approximate value

$$\rho_2 \sin(2\delta_1 + \delta_2),$$

as will appear presently.

Mr Harrison's construction is as follows.

With centre C, Fig. 198, and radius ρ_1 describe a circle, and let AA_1 be the line of stroke, CA corresponding with the zero position of the crank. Set out the angle ACD below CA and equal to δ_1; the angle A_1CO equal to $\delta_1 + \delta_2$; and make CO equal to $2\rho_2$. Draw OP at the given crank angle θ with CA. Drop a perpendicular from P on to DD_1. Then the length of this perpendicular, namely PM, is very nearly the displacement, x, of the valve, corresponding with the given angle θ.

For, denoting the small angle CPO by β,

$$PM = CP \sin MCP = \rho_1 \sin(\delta_1 + \theta - \beta),$$

and expanding the expression,

$$PM = \rho_1 \sin(\delta_1 + \theta)\cos\beta - \rho_1 \cos(\delta_1 + \theta)\sin\beta \quad \text{.....(2).}$$

Digitized by Google

Now in the triangle COP

$$\frac{CO}{CP} = \frac{\sin CPO}{\sin COP}.$$

That is
$$\frac{2\rho_2}{\rho_1} = \frac{\sin\beta}{\sin(\delta_1 + \delta_2 - \theta)},$$

so that $\rho_1 \sin\beta = 2\rho_2 \sin(\delta_1 + \delta_2 - \theta)$. Substituting this expression for $\rho_1 \sin\beta$ in (2), and writing unity for $\cos\beta$, since β is small,

$$PM = \rho_1 \sin(\theta + \delta_1) - 2\rho_2 \sin(\delta_1 + \delta_2 - \theta)\cos(\delta_1 + \theta).$$

Splitting the product of the sine and cosine into the sum of two sines,

$$PM = \rho_1 \sin(\theta + \delta_1) - \rho_2(\sin 2\delta_1 + \delta_2) - \rho_2 \sin(\delta_2 - 2\theta),$$

or
$$-PM = \rho_2 \sin(2\delta_1 + \delta_2) - \rho_1 \sin(\theta + \delta_1) - \rho_2 \sin(2\theta - \delta_2) \ldots\ldots (3).$$

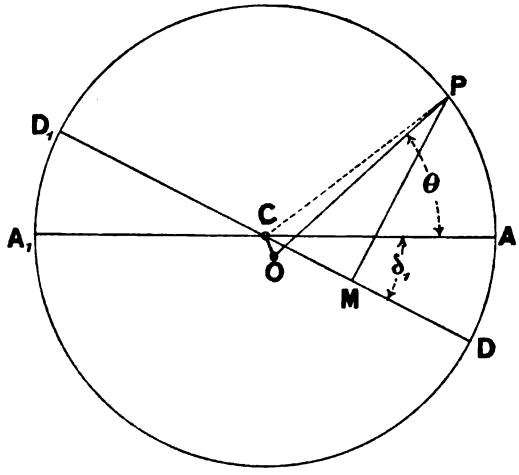

Fig. 198. HARRISON'S MODIFICATION OF THE REULEAUX DIAGRAM TO INCLUDE THE SECOND HARMONIC.

Comparing this expression with equation (1) at the beginning of the article, it is apparent that $-PM$ is equal to the displacement x, provided that the constant

$$A_0 = -\rho_2 \sin(2\delta_1 + \delta_2).$$

Referring to Fig. 198 again, it will be seen that the constant A_0 is equal to half the perpendicular distance from O to DD_1: and since DD_1 is a diameter, the maximum displacements are equal and opposite, that is to say, the perpendicular PM measures the displacement, x, from the central position of the valve.

The displacements at the dead points are unequal, hence the valve must have unequal laps to obtain equal leads. If the constant A_0 is zero, the line DD_1 must be replaced by a parallel line bisecting CO.

Digitized by Google

This would be the case for diagrams giving in a similar way the velocity and acceleration of the valve.

The displacement of the piston from its central position may also be obtained from a diagram constructed according to the above rule, suitable modifications being made in the values ρ_1, ρ_2, δ_1, and δ_2. Thus, referring to Article 152, it will be seen that the displacement of the piston from its central position is given very nearly by

$$X = R\cos\theta - \frac{R^2}{4l}\cos 2\theta + \frac{R^2}{4l}.$$

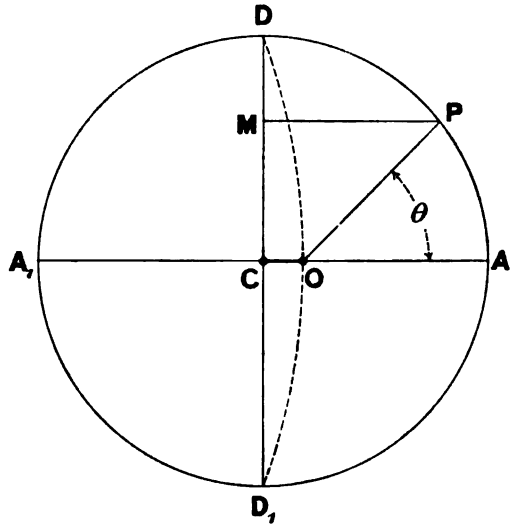

Fig. 199. Diagram for Piston Displacement to include the Second Harmonic.

Changing the cosines to sines, and writing n for the ratio $\frac{l}{R}$,

$$X = R\sin(\theta - 90°) - \frac{R}{4n}\sin(2\theta + 90°) + \frac{R}{4n}.$$

Comparing this with equation (1) of this article, it will be seen that

$$\rho_1 = -R,$$
$$\rho_2 = \frac{R}{4n},$$
$$\delta_1 = -90°,$$
$$\delta_2 = -90°.$$

The diagram thus takes the form shown in Fig. 199, where $CA = R$, ACD is the angle δ_1 set out above CA because δ_1 is negative*.

* A diagram similar to Fig. 199 was published in *Engineering*, Nov. 22, 1889, by Mr G. A. C. Bremme.

Digitized by Google

The line CO makes with CA_1 an angle $\delta_1 + \delta_2 = -180$ degrees; and CO is made equal to $\frac{R}{2n}$.

The crank is now supposed to revolve about the point O and to vary continuously in length, so that when it stands at the angle θ with OA, PM, the perpendicular from P to DD_1 is the displacement.

The point O may be found at once by the geometrical method already used, namely, with a radius equal to the length of the connecting rod draw the arc, shown dotted, through the points D and D_1, cutting the line of stroke in the point O. The distance CO is equal to $\frac{R}{2n}$, as will be seen from Fig. 68, supposing θ to be 90 degrees.

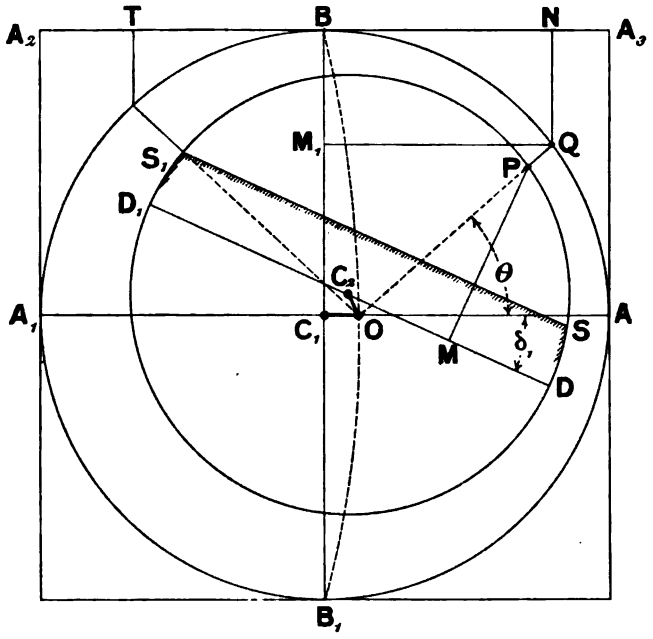

Fig. 200. HARRISON'S COMBINATION OF THE REULEAUX MODIFIED DIAGRAM WITH THE PISTON DIAGRAM TO FORM A VALVE DIAGRAM IN WHICH THE SECOND HARMONICS FROM BOTH THE PISTON AND THE VALVE GEAR ARE INCLUDED.

If the two diagrams, namely Fig. 198, and Fig. 199, be superposed so that the point O in each coincides, and the horizontal line AA_1 in the one is parallel to the horizontal line AA_1 in the other, a valve diagram is obtained from which the simultaneous values of the valve and piston displacements may be obtained. This combination of the two diagrams is shown in Fig. 200, where also the steam lap line SS' corresponding to the instroke cycle is added.

Digitized by Google

Summarising the two preceding rules for drawing the diagrams, the following is the rule for the combined diagram:—

> With centre C_1 and radius R draw a circle to represent the crank circle. Draw AC_1A_1, the line of stroke. Make C_1O equal to $\frac{AC_1}{2n}$. Set out the angle AOC_2 equal to $\delta_1 + \delta_2$, making OC_2 equal to $2\rho_2$. With centre C_2 and radius ρ_1 draw the valve circle, and draw the diameter DC_2D_1, making a negative angle δ_1 with C_1A.

The crank is now supposed to revolve about the point O, and if θ is the angle it makes with the line of stroke, PM is the valve displacement corresponding to the piston displacement QM_1.

The piston displacement may be projected upwards, as shown, on to the line A_2A_3, the point B marking the centre of the stroke.

The line SS_1 is drawn parallel to DD_1 at a distance therefrom equal to the steam lap for the instroke.

The point of cut off, T, is thus at once obtained from the diagram. By adding lines parallel to DD_1 corresponding with the steam lap for the outstroke cycle, and the two exhaust laps, all the events of the stroke can be found from the diagram.

Mr Harrison points out that this diagram indicates the conditions in which a 2θ term in the valve curve tends to correct the irregularities of steam distribution due to the finite length of the connecting rod. Thus, from the diagram it will be apparent that, if the piston and valve circles were coincident, the distribution would be symmetrical in the two cycles, with equal laps. The conditions that the two circles may be coincident are

$$(\delta_1 + \delta_2) = 0$$

and

$$\rho_2 = \frac{-\rho_1}{4n}.$$

Or again

$$(\delta_1 + \delta_2) = \pm 180 \text{ degrees}$$

and

$$\rho_2 = \frac{\rho_1}{4n}.$$

Digitized by Google

APPENDIX.

MEASUREMENT OF THE ANGULAR ADVANCE.

ASSUMING the engine to be provided with a flywheel or crank disc, turned on the rim, the following method may be used to find the angular advance with great accuracy.

Using a trammel of the kind illustrated in Fig. 10, and in the way explained in Art. 19, page 18, mark the dead points of the valve's motion on the valve spindle, whilst the engine is being barred round. Fix these points by small centre dots and bisect the distance between them, placing a centre dot in the mid-position. Then, holding the trammel against the spindle whilst the engine is being barred round, stop the barring when the trammel point drops into the middle of the three centre dots. The engine now stands in the position where the valve is exactly in the middle of its travel. Using a trammel of the kind shown at *DC*, Fig. 37, page 55, mark the rim of the wheel (not the face as indicated in Fig. 37) and put in a centre dot. Call this dot *V*.

Assuming the crank web to be accurately machined, bar the engine round again until the crank stands vertical, the vertical position being determined by a spirit level square held against the web. Mark the rim of the wheel with the trammel and put in a centre dot. Call this *P*. Then, assuming an infinitely long eccentric rod, the angle corresponding to the arc *VP* is the angle between the crank and the eccentric radius, since the eccentric radius and the crank radius were in their respective vertical positions when they passed the trammel point, which may be imagined always held against the wheel rim as an index. To find the angle corresponding to the arc *PV*, measure the circumference of the wheel by means of a thin steel tape, and then measure the length of the arc *PV*. Then

$$\frac{2\pi \times PV}{\text{circumference}}$$

gives the circular measure of the angle, and this can be converted into

Digitized by Google

degrees by the multiplier 57·296 or by the use of a table given in most books of mathematical tables. The result should be corrected for the obliquity of the eccentric rod, and the method of doing this will be clearly seen from Fig. 201.

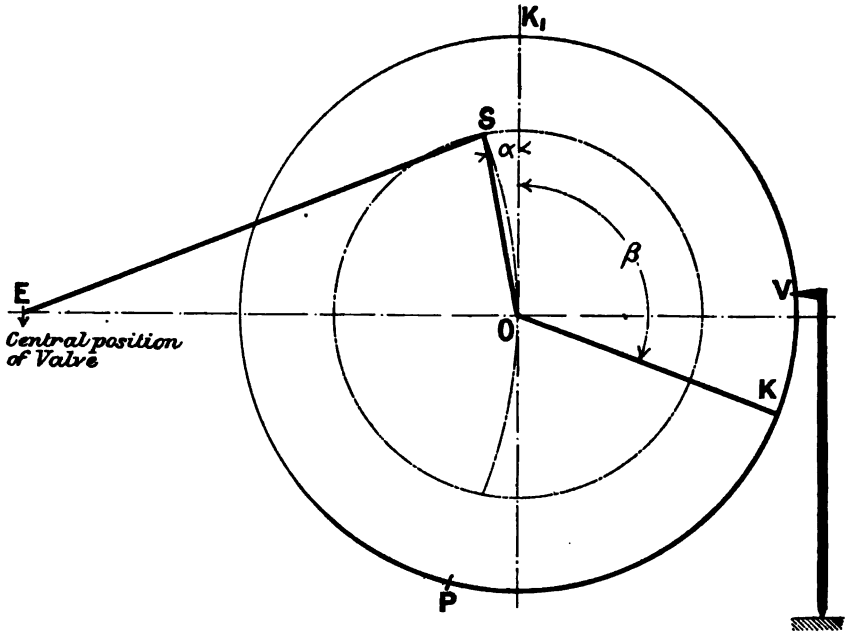

Fig. 201. Measurement of the Angular Advance.

The figure shows the position of the eccentric radius OS when the valve is in the middle of its travel, the eccentric rod SE being taken very short, in order to exaggerate the error. Let V be the position of the centre dot made on the rim of the wheel, or crank disc, when the valve is at the centre of its travel. Let OK represent the crank.

Then when the crank is turned into the vertical position, that is to OK_1, the crank shaft turns through the angle $KOK_1 = \beta$, and the trammel point will then mark the point P on the rim of the wheel, so that the arc PV divided by the radius of the wheel, measures the angle β. This angle is clearly less than the angular advance by the angle α. This latter angle may be calculated by means of equation (5), page 116, by inserting the proper ratio between the eccentric radius and the eccentric rod for n, and putting $f = 0$, obtaining thus the angle between the eccentric radius and the line of stroke when the valve is in its mid-position. The angle α is found by subtracting 90° from this angle.

Digitized by Google

If the engine is a vertical one the dot P is to be made when the crank webs are in the horizontal position.

In an actual case the distance between the two dots P and V, measured by a steel tape laid flat on the rim of the wheel, is 82·25 inches. The circumference of the wheel measured in the same way is 227·25 inches. Hence the angle β in degrees is given by

$$\frac{82{\cdot}25 \times 6{\cdot}282 \times 57{\cdot}296}{227{\cdot}25} = 130\tfrac{1}{2} \text{ degrees.}$$

The ratio of the length of the eccentric rod to the eccentric radius is 30 to 1. Hence from equation (5), page 116,

$$\cos\theta = 30 - \sqrt{901} = -0{\cdot}0166.$$

This is the cosine of an angle of 90 degrees 57 minutes, so that the magnitude of the angle α is 57 minutes. Call this 1 degree. Then the true angular advance is $131\frac{1}{2}$ degrees.

If the crank webs are not machined accurately the mark P may be put on the wheel rim when the piston is in the middle of its stroke, the engine being set in this position in exactly the same way as that just explained for the valve. That is to say a trammel must be made and the dead points of the stroke marked off with it on the piston rod as the engine is barred round. The distance between these two points is to be bisected and the engine then barred round until the trammel point drops in the middle dot. The mark P on the wheel will in this case not correspond to either a vertical or horizontal position of the crank but to the crank position corresponding to the middle position of the piston. A correction must accordingly be made for the obliquity of the connecting rod. It can easily be seen that if θ_s is the angle which the eccentric sheave makes with the line of stroke when the valve is in its central position, calculated from equation (5), page 116, and θ_c, the angle which the crank makes with the line of stroke when the piston is in its central position, also calculated from equation (5), page 116, then the true angular advance is

$$\beta - (\theta_c - \theta_s),$$

β, as before, representing an angle equal to the angle subtended by the arc PV. This latter method is the most accurate of the three methods given (namely one on page 55 and the two above) because the respective trammels fix the central position of the piston and the valve when both have the maximum velocity ratio to the crank pin.

In applying this method care must be taken that when the crank shaft is turned, the valve spindle and the piston move away from their mid-positions in the same direction, otherwise the angular advance will

Digitized by Google

be nearly 180 degrees wrong. Also the engine must always be turned in one direction. If in placing the trammel point, the mid-position is overshot, the engine must be barred the whole way round again in the same direction. If this point is not attended to the slackness in the joints of the gear introduces sensible error into the result.

When the crank shaft carrying the sheave, keyed in its proper place, is detached from the engine, the angular advance of the sheave may be measured in the way illustrated in Fig. 202. The crank shaft is to be supported in V blocks and the crank placed horizontally. A fine string, or better a piece of flat steel like the material used for steel tapes, is to be hung over the sheave with suitable weights attached to the free ends. A similar string or tape is to be placed over the crank shaft.

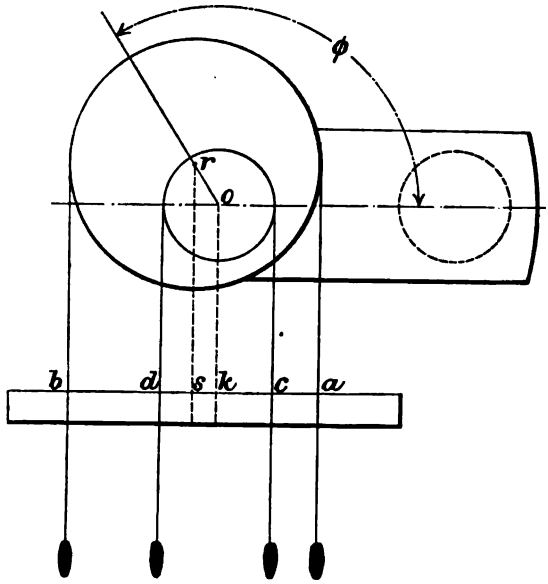

Fig. 202. The Setting of an Eccentric Sheave.

A straight edge, or strip of wood or steel, is then held near the strings and the lines, coincident with the strings, through the points a, c, d, b, are to be marked on it. These marks record the horizontal distances between the strings. It will be seen at once that the point s, which bisects the distance ab, is vertically under the centre of the sheave r: and that the point k, which bisects the distance cd, is vertically under the centre of the shaft O. Hence the distance sk is the horizontal projection of the eccentric radius, and if ϕ is the angular advance

$$sk = r \cos \phi,$$

from which ϕ can be found when sk and the eccentric radius are

Digitized by Google

measured. If the eccentric radius is not otherwise known it may be found by slowly turning the crank shaft in the V's and measuring the maximum value of *sk*.

When the angular advance is given the quantity *sk* can be calculated, and with the known diameter of the sheave and the crank shaft the four lines may be set out on a board or steel strip. This strip may be used for setting the eccentric sheave in the proper position on the shaft. For this purpose the strip is clamped in position so that the strings over the crank axle coincide with the lines *c* and *d*, and then, the crank being horizontal, the eccentric sheave is turned on the shaft until the strings hanging from it are brought into coincidence with the lines at *a* and *b*. The keyway is then marked off on the shaft, to be subsequently cut and fitted with the key.

There are other ways of measuring the angular advance, and other ways of setting the sheave at the proper angle with the crank, and a student will have no difficulty in devising ways for himself to meet any peculiarity of design.

Digitized by Google

INDEX.

Acceleration
  Of mass centre of a link 296
  Of motion of valve 35, 345
Acceleration diagrams 286
  Four-bar chain 288
  Joy gear 291, 301
Adjustment of the inequalities of cut off, etc.,
  By means of unequal laps 77
  By means of a rocking lever 78
Admission 17
  Inside 18, 47
  Outside 48
Allan Straight Link Motion
  Approximate theory 202
  Design of 205
  Drawing a displacement curve 198
  Equivalent eccentric 205
  Example 293
  General description 191
  London and North Western Railway 192
  Percentage and port opening diagram 199
  Proportion between arms of weigh-bar shaft 193
  Slip 201
  Trigonometrical expressions for the full forward gear valve displacement curve,
    Five terms 346
    Seven terms 344
    Two terms. Eq. (1) 202
  Valve diagram 197
  Valve displacement curves 196
Alley and Maclellan, Messrs, Glasgow 269
"All round" controlling mechanism 218
American Locomotive Company 141
Analyser, Harmonic 340
Analytical Method, The 114
Angle between centre line of main gear and valve gear 83, 148, 192
Angular acceleration 295, 296
  Relation between, and couple producing it 36, 296
Angular advance 48
  Effect of rocking lever on 81
  Of eccentric coupled to top of link 179
  Measurement of 55, Appendix.
Angular difference between crank and eccentric radius 42
Angular Lag 48
Appendix 354
Aspinall, J. A. F. 24, 250, 299
Axis of displacement curves in valve diagrams 146, 150, 156, 236

Balanced valves 22
Balancing piston 22
Baldwin Locomotive Company 29
Bending moment
  Due to thrust and lateral loading 323
  On an eccentric rod 321
  On connecting rod of Joy gear 310
  On the link of a link motion 319
Bennett's construction 302
Bilgram valve diagram 68
Bremme, Mr G. A. C. 351
Brock, Mr W. 230
Brown radial gear 248
Brown's power controlling gear 217
Buckle, Valve 14
Burg, N. P. 138

Clifford, Geometrical method of finding the coefficients in a Fourier's series 340
Coefficient of friction, slide valve 24
Coefficients in Fourier's series, see under T, Trigonometrical series
Colmann valve 13
Common axis of displacement curves 146, 150, 156, 236
Components of valve displacement curve, 90 and 180 degree 222
Compound locomotive, Starting a 275
  The development of, in England 278
Compression 4, 17

Digitized by Google

Connecting rod, bending moment on, 310, 321
Constants, A and B, in the expressions for valve displacement
  Allan link motion 208
  Gooch link motion 190
  Hackworth gears 244
  Joy gear 264
  Simple eccentric gear 119
  Stephenson link motion 179
  Walschaert gear 235, 236
Controlling mechanisms for reversing gears
  Hand control
    Lever and quadrant 207
    Wheel and screw 209
  Power control
    Brown's gear 217
    Holden's combined hand and power gear 213
    Steam reversing gear, Great Western Railway 211
    The "all round" gear 213
Corliss valve gear 109
  Valves 33, 109
Cosine series 335
Coste and Maniquet, MM. 254
Couple and angular acceleration 36, 296, 303
Crank and connecting rod 37, 45, 115
  Calculation of crank angles for given piston positions 128
  Calculation of piston position for given crank angles 128
  Measurement of ratio between lengths of 53
  Ratio between lengths of 41
Cut off 3, 17
  Plates 90, 131
  Valve, see Separate cut off valve
Cycle
  Instroke and Outstroke, Definition of 5
  Of events in the steam distribution 1
  Specification of a 6

Dashpot 11, 13, 108
Data required for the drawing of a valve diagram 53
Dead point, Definition of 1
  Setting the piston on a 55
Definition of "κ" 253
  Of "u" 146
Denny & Company, Messrs 230
Design
  Of a valve gear, Statical and dynamical problems 279
  Of Steam ports 84
  Problems 73, 124
Design of, Approximate
  Allan link motion 205
  Joy gear 265
  Stephenson link motion 183
  Walschaert gear 239
Displacement curve
  Determination of, to pass through one given point 72
  Determination of, to pass through two given points 70
  90 and 180 degree component of 222
  Piston 39, 42, 43
  Quantities which determine points on a 73
Displacement curves
  Approximate, Link motion 169
  Approximate expressions for valve, see under Expressions
  Valve, see under Valve diagrams
Distribution of Steam effected by Stephenson link motion 146
Double acting engine 5
Double beat valves, or equilibrium valves
  Colmann 13
  Effect of heat on 13
  Hornblower 9
  Sulzer 10
    Four seated 11
Double ported valve 21
Dynamical principles 296

Eccentricity, or eccentric radius 45
Eccentric rod 45
  Inertia stresses in 320
Eccentric sheave 45
  Imaginary 97, 127, 131
  The loose 134
Eccentric strap 45
Equilibrium valve, see Double beat valve
Equivalent dynamical system of two particles 297
Equivalent eccentric 170, 174, 348
  For Allan straight link motion 203, 205
  For the Gooch link motion 190
  For Hackworth gear 244
  For Joy gear 264
  For Stephenson link motion 181, 183
  For Walschaert gear 235
Examples distributed through the book worked from numerical data:
  Acceleration diagrams. Joy gear 291, 301
  Admission and cut off equalised by a rocking lever 80
  Allan gear, calculation of displacement equation for full forward gear, 203, 344, 346

Digitized by Google

Examples etc. (*cont.*)
Allan link motion. Calculation of the proportion between the arms of the weigh-bar shaft 195
Allan straight link motion. Calculation of the constant of the equivalent eccentric 205
Angular acceleration of the links of a Joy gear 295
Bilgram diagram (data, page 56) 69
Comparison of actual and approximate displacement curves. Link motion 171
Compressions equalized by the use of unequal exhaust laps 78
Design of a Stephenson link motion 184
Design problem, worked analytically 125
Displacement curve, crank and connecting rod 38
Equation giving the approximate valve displacement of the Great Eastern Railway link motion adjusted for various settings 179
Equilibrium valve 11
Fixing the axis of the weigh-bar shaft, Stephenson link motion 186
Inertia force of a slide valve 35
Joy gear. Accelerating forces 299—308
Bending moment on a connecting rod 210
Joy valve gear. Valve displacement curves 254
Bennett's construction applied to find a point in the line of action of the accelerating force on a link of the gear 307
The drawing of point paths 259
Force acting at the connecting rod joint due to the valve resistance. A static problem 281
Force acting at the connecting rod joint due to the acceleration of the gear. A dynamical problem 308
Link motion, Great Eastern Railway 149
Results in Table (7) 154
Results plotted in Figs. (87), (88) 155
Link motion with crossed rods. Inside admission 161
Meyer gear, worked analytically 128
Meyer valve gear (data, page 91) 91
Oval valve diagram (data, page 56) 63
Radial acceleration of the links of a Joy gear 292
Radius of gyration of a link in a Joy gear 299
Reuleaux diagram (data, page 56) 68

Examples etc. (*cont.*)
Simple eccentric gear, worked analytically 121
Stress in connecting rod due to inertia loading 315
Stress in coupling rod due to combined thrust and lateral loading 323
Stress in eccentric rod due to inertia loading 322
Valve diagram, simple eccentric gear 57
Velocity diagrams
Crank and Connecting rod 285
Four-bar chain 289
Joy gear 291
Velocity of cut off, Meyer valve gear 91
Velocity of the slide valve 59, 345
Walschaert valve gear. Calculation of valve displacement 237
Design of from given data 241
Zeuner diagram (data, page 56) 66
Exhaust ports, Design of 85
Expansion valve, see under S, Separate cut off valve
Expression for approximate displacement of the slide valve in terms of the crank angle
Allan straight link motion. Eq. (1) 202, 344, 346
Gooch link motion. Eq. (1) 190
Hackworth gear. Eq. (3) 244
Joy gear. Eq. (3) 264
Meyer gear, cut off valve. Eq. (6) 127
Simple eccentric gear 48, 116, 345
Stephenson link motion. Eq. (4) 178, 344
Walschaert gear. Eq. (7) 234, Eq. (14) 236
Expressions for constants "*A*" and "*B*," see under C

Forces
Due to inertia loading of a Joy gear 299—308
On a Joy gear 281
Fourier's series, see under T, Trigonometrical series
Friction of locomotive slide valves 24

Gooch link motion 188
Equivalent eccentric 190
Initial geometrical problem 189
Theory 189
Gozenbach separate cut off valve 88
Grunger, Otto 249

Hackworth Radial gears 243
Approximate theory 244

Digitized by Google

Hand reversing 132
Harmonic Analysis 340
Harrison, Mr J. 349
Henrici, Prof. O. 340
Hick, Hargreaves and Co., Messrs 33
Holden, Mr J. 139
Holden's power controlling gear 213
Howe-Stephenson reversing gear 137
Humphry and Tennant, Messrs 26, 143
Hunting gear 268, 271

Imaginary eccentric sheave
  Gear with variable travel 131
  Meyer gear 97, 127, 129, 131
Inclination of the centre line of the main gear with the centre line of the valve gear 83
Inside steam admission 18, 47
Instroke Cycle, Definition of 5

"Jeanie Deans" 136
Johnson, Mr S. W. 30, 32
Joy Valve Gear 250
  Acceleration diagrams of 291, 301
  Approximate theory 263
  Bending moment in connecting rod due to inertia loading of the valve gear and the rod itself 210
  Design 265
  Drawing the displacement curves 254
    Suppression of links, General Theory
      Theorem (1) 254
      Theorem (2) 257
  Forces at joints of the gear, for a given valve resistance. Statical problem 281
  Forces due to the inertia loading of the gear 299–308
  Lancashire and Yorkshire Railway 251
  Marine type 253
  Valve displacement curves 253
  Velocity diagram of 291
  The constant "κ" 253
  The drawing of the point paths and the "suppression of the links" 259

"κ," Definition of 254

Lancashire and Yorkshire Railway, Balanced valve 24
Lap
  Exhaust 16
  Measurement of 56
  Negative exhaust 17
  Negative, of cut off valve, Meyer gear 95, 101
  Negative steam 17
Lap (*cont.*)
  Steam 16
  Variable, Meyer gear 95
  Variation of, Rider gear 103
  Unequal, on slide valve 77
Lead 16
Lift valves 8
Link Motion
  Allan, see under A
  Bending moment on link 319
  General theory of the 172
  Gooch, see under G
  Inertia forces 319
  Partly spring supported 156
  Stephenson, see under S
  The 138
  Velocity of valve in 206
Locomotive running light 151
Loose eccentric sheave, The 138
Low pressure valve for marine engine 26

Macfarlane Grey's construction 170
Malcolm, Mr B. 230
Marking the valve spindle 18
Marshall & Sons, separate cut off valve 104
Marshall's radial gear 246
Matthew Murray 7
Maw, Mr W. H. 188
McIntosh, Mr 141
Measurement of data 53, Appendix.
Mechanism
  Acceleration diagram, see under A
  Velocity diagram, see under V
Meyer separate cut off valve 92
Meyer valve gear
  Example of 91
  Example worked analytically 128
  Imaginary eccentric for the motion of the cut off valve 97
  Laps required for different cut offs, found
    By calculation 129
    From Rectangular diagram 95
    From Reuleaux' diagram 101
  Minimum overlap of cut off blocks 96
  Rectangular valve diagram for 94
  Valve diagram for cut off valve alone 98
  Velocity of cut off 131
Mid-gear 148, 151, 164
Mitre valve 8
Moment of inertia of a link. Method of measuring 297
Murdoch 7
Murdoch long D slide valve 19

Negative rotation 117

Digitized by Google

Nett work done during a cycle 4
Non-starting crank angles
  Single cylinder 272
  Two cylinders, cranks at right angles 273
Norris reversing gear 137
Northern Railway of France 25, 227

Outside steam admission 46
Outstroke cycle, Definition of 5
Oval valve diagram 63

Parr, Mr P. H. 327
Paxman separate cut off valve 89
Perry, Prof. John 324
Piston displacement curve
  On crank angle base 39
  On big end base 42
  Polar form 43
Piston position corresponding to a given crank angle
  Alternative construction 40
  Construction for finding 38
  Expression giving the 115
  Table giving the 123, 128, 131
  Use of a template for finding the 40
Piston valve 27
  Marine engine 28
  Packing 29
  Vauclain 29
Plumb bob, Use of to find the radius of gyration of a link 297
Point paths
  Of ends and centre of the link of a link motion 168, 201
  Of joints in a Joy gear 260, 262
Polar valve displacement curves 65
Ports, Steam and Exhaust 14
  Design of 84
Positions of slide value at cut off, release, compression and admission 17
Power reversing gears. See under C, Controlling gears
Problems
  Design 73
  Given the crank angle at cut off, the lead, and the eccentric radius; find the steam lap and angular advance 74
  Given the crank angle at cut off, the lead and the maximum opening for steam; find the eccentric radius, the steam lap, and the angular advance 75, 77, 124
  To draw a displacement curve through one given point 72
  To draw a displacement curve through two given points 70

Puritan, S.S. 134

Quadrant and reversing lever 208

Radial acceleration 286
  Of links in a Joy gear 292
Radial valve gears
  Brown 248
  Direct connection of gear to connecting rod impracticable 248
  Hackworth 243
  Joy 250
  Two geometrical conditions which must be satisfied by 247
Rectangular valve diagram 56
Release 17
Relief frame for triple ported slide valve 26
Resolution of valve displacement curve into two components 221
Reversing
  By hand 132
  By link motions, see under L
  By means of one fixed eccentric sheave 224
  By means of one loose eccentric sheave 134
  By means of two fixed eccentric sheaves 136
  By radial gears, see under Radial gears
Reversing gear, Definition of 132
Reversing lever, reversing wheel, see Controlling gears
Reuleaux valve diagram 67, 101
  Modification of to include second harmonic 349
Reynolds, Prof. Osborne 52
Richardson strips 22
Rider separate cut off valve 103
Rocking lever
  And angular advance 81, 147
  Trigonometrical expression for valve displacement curve 345
  Used to correct inequalities of distribution 78, 345
Rocking valve 8, 32

Separate cut off valve
  Corliss design 34, 106
  Gozenbach design 88
  Marshall and Sons, Gainsborough 104
  Meyer 92
  Meyer gear with divided main valve 100
  Paxman design 89
  Rider 103
  Sulzer 10, 12, 110

Digitized by Google

Setting an eccentric sheave, Appendix page 354
Sharp, Mr Archibald 257
Sheave, setting an eccentric, Appendix page 354
Simple eccentric valve gear 44
  Design of 70
  Eccentricity, or eccentric radius, of eccentric sheave 45
  Eccentric sheave 44
  Eccentric strap 44
  Expressions for valve displacement 47, 48
  Inside steam admission 47
  Outside steam admission 46
  Scales for valve diagram 52
  Travel of valve 45
  Valve diagram 51, 57
  Valve displacement curve in combination with piston displacement curve 49
Sine series 331
Single acting engine 5
Slide valve 8
  Balanced 22
    Lancashire and Yorkshire Railway 24
    Northern Railway of France 25
  Critical positions of 17
  Double ported 21
  Friction of 24
  General description of 14
  Inertia of 35
  Lap of, steam and exhaust 16, 17
  Lap, unequal 77
  Matthew Murray's 7
  Murdoch's long "D" 19
  Piston, see Piston valves
  Port opening for steam and exhaust 16, 17
  Relief frame for triple ported 26
  Trick 20
  Triple ported 22
  Velocity of, see under V
  Wear of 31
Slip 318
Smith, Prof. R. H. 284
Spindle, Valve 14
S.S. Puritan 134
Starting and non-starting crank angles 271
Starting gear, compound locomotive 276
Statical and dynamical problems 279
Steam reversing mechanisms (see Controlling gears) 211, 215, 217
Steam steering gear 268
Steering gear 268
Stephenson Link Motion
  Adjustable apparatus for drawing valve displacement curves 169
  Approximate valve displacement curves 170
  Central Railroad of New Jersey 141
  Common axis of displacement curves 156
  Crossed rods, inside admission 158
    Outside admission 157
  Definition of "u" 146
  Design of 183
  Distribution of steam effected by 146
  Drawing valve displacement curves 163
  Equivalent eccentric 174, 181, 183
  Great Eastern Railway 139
  Link point paths 167
  Macfarlane Grey's construction 170
  Marine engine, for 143
  Open rods, outside admission 149
  Percentage and port opening diagram 155
  Position of weigh-bar shaft
    Link supported at centre 185
    Link supported at one end 187
  Positions of eccentric sheaves in various cases 147
  Slip 166
  Theory of (see under T) 172, 175
  Trigonometrical series representing valve displacement curve
    Seven terms 344
    Two terms. Eq. (4) 178
  Valve setting 156
Stephenson Reversing Gear 137
Straight link reversing motion, see under A, Allan link motion
Stress, Inertia
  Connecting rod, Joy gear 315
  Eccentric rod 320
  Eccentric rod, coupling rod, or connecting rod, more exact theory 323
  Link of a link motion 319
Stroke, Definition of 1
Sulzer 7
  Dashpot and spring 11
  Double beat valve 10
  Four seated valve 11
  Valve gear 11, 110
Summary of the characteristics of the Stephenson link motion
  With closed rods 157
  With open rods 153
Suppression of the links of a mechanism when setting out the point paths
  Examples 41, 165, 233, 259
  General theory 254

Digitized by Google

Sweet, Professor 81

Tables
Table 1. Identification of a given critical valve displacement with the corresponding event of the cycle 119
Table 2. Simultaneous values of the valve displacement and the crank angle 120
Table 3. Details of the calculation of piston positions from given crank angles 123
Table 4. Details of the calculation of crank angles from given piston positions 128
Table 5. Meyer gear. Laps required for specified cut offs 129
Table 6. Meyer gear. Velocities of cut off 131
Table 7. Distribution of steam. Stephenson link motion 154
Table 8. Link motion. Quadrant in which the eccentric sheave, coupled to the top of the link, lies in various cases 179
Table 9. Walschaert gear. Comparison of calculated and measured valve displacements. Mid-gear 238
Table 10. Ditto. Valve displacements, for values of "u" + 144 mm. and − 114 mm. 239
Table 11. Radial acceleration of links of a Joy gear 292
Table 12. Dynamical data for Joy gear. Lancashire and Yorkshire Railway 303
Table 13. Inertia loading of the connecting rod of a Joy gear 313
Table 14. Coefficients in three trigonometrical series representing the full forward displacement curve. Allan straight link motion 347
Tangential acceleration 286
Of links of a Joy gear 295, 308
Template, use of to suppress links 41, 165, 233, 254, 259
Thames steamers 135
Theory of the Allan straight link motion 193, 202
Assumptions made 202
Equivalent eccentric 203
Theory of the Gooch link motion 189
Assumptions made 189
Equivalent eccentric 190
Theory of the Hackworth gear 244
Theory of the Joy gear 263
Theory of Stephenson link motion 175
Assumptions made 177
Design from the equivalent eccentric 183
Examples 180, 184
Form of link 176
General displacement equation (4) 178
Geometrical interpretation of results leading to the proof of Macfarlane Grey's construction 181
Positive value of ϕ unrestricted 179
Resulting generality 179
Theory of the Walschaert gear 233
Thompson, Prof. Silvanus P. 340, 342
Travel of valve 45
Measurement of 53
Trigonometrical expression
For motion of piston 328
For a curve passing through one given point 338
For a curve passing through two given points 331
For a curve passing through n given points 331
Trigonometrical series
Calculation of coefficients in a sine series of two terms 331
In a cosine series of n terms 335
In a Fourier series 338
In a sine series of n terms 333
Coefficients in a Fourier series found for
Allan link motion 344, 346
Simple eccentric gear with rocking shaft 345
Stephenson link motion 344
Coefficients in a Fourier series found graphically 340
Found approximately from a selected number of points 340, 343
Found mechanically 340
Cosine series 335
Fourier's series 337
Sine series 333
Triple ported valve 22

"u," Definition of 146

Valve buckle 14
Valve diagrams
Allan straight link motion 197
Bilgram. Simple eccentric gear 68
Effect of introducing a rocking lever 82
Harrison's modification of the Reuleaux diagram to include the second harmonic of the valve gear and the connecting rod 347
Joy gear 255

Digitized by Google

Valve diagrams (*cont.*)
Meyer gear. Cut off valve 98
Main valve and separate cut off valve 94
Oval. Simple eccentric gear 63
Rectangular. Simple eccentric gear, 51, 57
Reuleaux. Simple eccentric gear 67
Stephenson link motion
Comparison of actual with approximate displacement curves 171
Crossed rods. Inside admission 161
Outside admission 159
Open rods. Outside admission 149
Walschaert gear 231
Zeuner. Simple eccentric gear 64
Valve displacement. Expressions for, see under E
Valve gear, Definition of 1
Valve gears
Allan link motion, see under A, 191
Brown's gear, see under B, 248
Corliss, see under C
For working separate cut off valves, see under S
Gooch link motion, see under G, 188
Hackworth gear, see under H, 243
Interchange of steam and exhaust pipes 267
Joy gear, see under J, 250
Marshall gear, see under M, 246
Rider, see under R
Simple eccentric gear, see under S
Stephenson link motion, see under S, 138
Sulzer, see under S
Walschaert gear, see under W, 224
Valves
Colmann 13
Corliss 33
Double ported 21
Hornblower double beat or equilibrium 9
Inertia of 35
Locomotive, Lancashire and Yorkshire Railway 24
Northern Railway of France 25
Mitre valve 8
Murdoch's long D slide 19
Piston 27, 28
Rocking 8, 32
Separate cut off, see under S
Slide 7, 14
Smith's segmental 30
Sulzer double beat 10
Four seated equilibrium 11
Valves (*cont.*)
Trick 20
Triple ported 22
Vauclain 29
Valve setting 86, 156
Valve spindle 14
Variation of the elements of a gear 61
Vauclain piston valve 29
Velocity
Of cut off. Meyer gear 131
Of steam through ports 84
Of valve found from displacement curve 59
Calculated 121
Link motions 206, 345
Velocity diagram
For a crank and connecting rod 285
For a four-bar chain 288
For a Joy gear 290
For a link motion 316

Walschaert valve gear
Adjustment of Eq. (14) page 236, to give the displacement from a common axis 236
Approximate Theory
1st approximation. Eq. (7) 235
2nd approximation. Eq. (14) 236
Belfast and Northern Counties Railway 229
Comparative tables of calculated and observed displacement 239
Design of the eccentric sheave 239
Of the gear from given data 241
Drawing the valve displacement curves 232
Example 237
General description 224
Mechanical details 240
Northern Railway of France 226, 228
Setting the eccentric sheave 237, 242
Valve diagram 230
Wear of slide valves 31
Webb, Mr F. W. 25, 136, 250
Weigh-bar shaft 136, 183, 185, 193, 196
Wheel, Reversing 209
Work done during a cycle 4
Worked examples. See under E
Worsdell and von Borries 275

Yarrow, Mr A. F. 29

Zeuner valve diagram 64

CAMBRIDGE: PRINTED BY JOHN CLAY, M.A. AT THE UNIVERSITY PRESS.

Digitized by Google

Digitized by Google

Digitized by Google

Digitized by Google

89089672612

B89089672612A

Digitized by Google

E. 5.K 1
M. 50

Digitized by Google

89089672612

b89089672612a

Digitized by Google